Non-Metallic Disconnect Specification Document

APPLICATION

The ON/OFF capabilities of a safety disconnect switch assures users that an electric circuit is completely de-energized before performing any maintenance or servicing. According to NEC Article 430.102B, a disconnect must be located in sight of all motors and manufacturing equipment. Powerswitch® non-fused safety disconnect switches are Listed to UL 60947-4-1 (US & Canada):

- Shall be installed between the final motor branch-circuit short-circuit protective device (fuse or circuit breaker) and the motor
- Shall (simultaneously) open all ungrounded supply conductors and shall be so designed that no pole can be operated independently
- Shall be capable of being locked in the open position

SPECIFICATION

The enclosure shall meet the following ratings:

- Ingress Protection:
  - NEMA 250/UL 50E Type 3R, 4, 4X, 6, 6P, 12, 13
  - IEC IP66, IP67, IP68, IP69K
- NSF: 14159-1, Hygienic Requirement for the Design of Meat & Poultry Processing Equipment
- cULus: UL60947-4-1A (Suitable as Motor Disconnect)
- Impact Resistance: UL746C
- Flammability: Rated V-0 per UL 94
- Minimum Electrical Endurance: 6,000 operating cycles at rated current and voltage
- Mechanical Endurance: 20,000 Operations (10,000 Operation Cycles)
- CE: CE Marked*
- Warranty: 3-Year Limited
- Condition Monitoring Capabilities: Local and Remote (via Wi-Fi or Modbus RTU)
- Door Style: Bottom Hinge for easy installation and servicing
- Label Style: Laser etched markings for improved appearance and cleanability**
- Handle Style
  - Lockable: Accepts 3 padlocks as per NEMA KS 1 for OSHA LOTO compliance
  - Grip: Long, overmolded handle for improved grip
- Top: Available flat or curved (30/32 A option only)
- Mounting Feet:
  - Adjustable: Adjustable for several angles
  - Standoff: Provide ¼" standoff from surface for NEC 300.6 air space requirements in indoor wet locations
- Electric power: Accommodate single-, split-, and three-phase (including hi-leg delta) configurations

*non-Inform units only
**Inform units only

COUNTRY OF ORIGIN

- Mexico

Green highlight = Industry-exclusive features

Local Condition Monitoring

- Ability to monitor phase voltage (single and three Phase) of the line side and load side of the switch and display status via individual LEDs (one for each phase); green steady LED indicates normal voltage level, red blinking LED indicates abnormal voltage level
- Ability to monitor ground continuity upstream of the switch and display status via LED; green steady LED indicates presence of ground, red blinking LED indicates open ground
- Ability to monitor liquid accumulation inside enclosure and display status via LED; green steady LED indicates no appreciable liquid accumulation, yellow blinking LED indicates appreciable liquid accumulation

Remote Condition Monitoring

- Ability to remotely view condition monitoring status and receive alerts when abnormal operating conditions exist
- Ability to monitor temperature and relative humidity inside the enclosure
- Ability to view actual sensor values
- Ability to perform over-the-air (OTA) firmware updates
- Wi-Fi communication interface conforms with Wi-Fi® 802.11 a/b/g/n networks @ 2.4GHz and 5GHz with WPA or WPA2 security
- Modbus RTU communication interface allows for flexible integration into existing automation systems

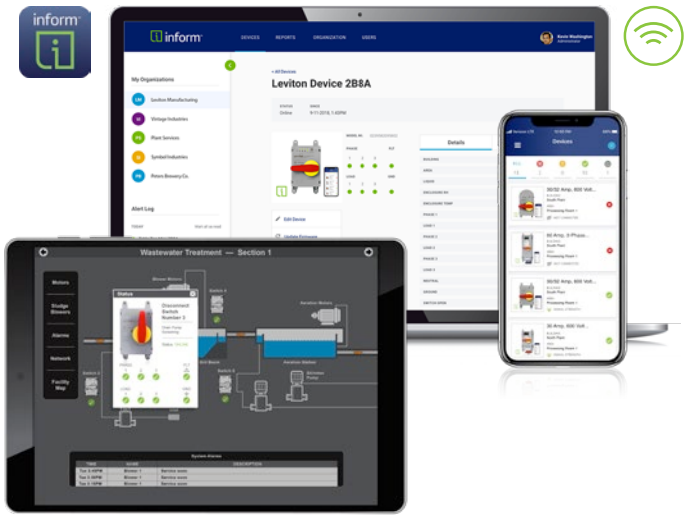

PHYSICAL SPECIFICATIONS

DIMENSIONS:	See pages 6-7
MATERIALS:	**Enclosure:** PBT+PC **Handle:** PBT+PC with TPE Overmold **Enclosure Screws:** Stainless Steel **Enclosure Gasket:** Silicone Rubber **Mounting Feet:** PBT+PC
ENVIRONMENTAL CONDITIONS:	**Operating Temperature (Non-Inform Units):** -40°C to 75°C **Operating Temperature (Inform Units):** -40°C to 65°C

WARRANTY INFORMATION

3-YEAR LIMITED WARRANTY

ORDERING INFORMATION

Disconnect Switches with inform™

Description	Catalog Number
30/32 A, Flat Top, Non-Fused with Inform, Remote Monitoring (Wi-Fi)	LDS30-AXC
30/32 A, Flat Top, Non-Fused with Inform, Remote Monitoring (Wi-Fi) with Auxiliary Contact (Normally Open)	LDS30-ACC
30/32 A, Curve Top, Non-Fused with Inform, Remote Monitoring (Wi-Fi)	LDS30-CTC
30/32 A, Flat Top, Non-Fused with Inform	LDS30-AXS
30/32 A, Flat Top, Non-Fused with Inform with Auxiliary Contact (Normally Open)	LDS30-ACS
30/32 A, Curve Top, Non-Fused with Inform	LDS30-CTS
30/32 A, Flat Top, Non-Fused with Inform, Remote Monitoring (Modbus RTU)	LDS30-MB
30/32 A, Flat Top, Non-Fused with Inform, Remote Monitoring (Modbus RTU) with Auxiliary Contact (Normally Open)	LDS30-AMB
30/32 A, Curve Top, Non-Fused with Inform, Remote Monitoring (Modbus RTU)	LDS30-CTM

Disconnect Switches

Description	Catalog Number
30/32 A, Flat Top, Non-Fused	LDS30-AX
30/32 A, Flat Top, Non-Fused with Auxiliary Contact (Normally Open)	LDS30-AC
30/32 A, Flat Top, Fused	LDS30-FAX
30/32 A, Curve Top, Non-Fused	LDS30-CT
30/32 A, Curve Top, Non-Fused with Auxiliary Contact (Normally Open)	LDS30-ACT
60 A, Non-Fused	LDS60-AX
60 A, Non-Fused with Auxiliary Contact (Normally Open)	LDS60-AC
60 A, Fused	LDS60-FAX
100 A, Non-Fused	LDS10-AX
100 A, Non-Fused with Auxiliary Contact (Normally Open)	LDS10-AC
100 A, Fused	LDS10-FAX

Accessories

Description	Catalog Number
30/32 A, Non-Fused, Replacement Cover for Inform	LDS30-RCS
30/32 A, Non-Fused, Replacement Cover for Inform (Wi-Fi)	LDS30-RCC
30/32 A, Non-Fused, Replacement Cover for Inform (Modbus RTU)	LDS30-RCM
Non-Fused Auxiliary Contact, Rated 10 A 600 V, Normally Open, For Use With 30/32, 60 and 80 A Devices	AUXNO
Non-Fused Auxiliary Contact, Rated 10 A 600 V, Normally Closed, For Use With 30/32, 60 and 80 A Devices	AUXNC-NF
Non-Fused Auxiliary Contact, Rated 10 A 600 V, Early Break, For Use With 100 A Devices	AUXNO-NF1
Fused Auxiliary Contact, Rated 10 A 600 V, Normally Open, For Use With 30/32 A Devices	AUXNO-F1
Fused Auxiliary Contact, Rated 10 A 600 V, Normally Closed, For Use With 30/32 A Devices	AUXNC-F1
Fused Auxiliary Contact, Rated 10 A 600 V, Normally Open, For Use With 60 and 100 A Devices	AUXNO-F2
Fused Auxiliary Contact, Rated 10 A 600 V, Normally Closed, For Use With 60 and 100 A Devices	AUXNC-F2

Description	Catalog Number
30/32 A Replacement Non-Fused Switch	30ASW
60 and 80 A Replacement Non-Fused Switch	6080A-NF
100 A Replacement Non-Fused Switch	100SW-NF
30/32 A Replacement Fused Switch	30ASW-F
60 A Replacement Fused Switch	60ASW-F
100 A Replacement Fused Switch	100SW-F
Watertight Conduit Hub, Die-Cast Zinc, ¾"	HUB-34
Watertight Conduit Hub, Die-Cast Zinc, 1"	HUB-100
Watertight Conduit Hub, Die-Cast Zinc, 1 ¼"	HUB-114
Watertight Conduit Hub, Die-Cast Zinc, 1 ½"	HUB-112
Watertight Conduit Hub, Die-Cast Zinc, 2"	HUB-200
Watertight Conduit Hub, Stainless Steel, ¾"	SSHUB
Mounting Feet	MOUNT-LDS
Replacement Overmold Handle	HNDLE

NOTE: Separate mounting bracket needed for attaching fused auxiliary contacts to switch. Contact Customer Service for availability.

= Wi-Fi Communication

= Modbus RTU Communication

DIMENSIONS

LDS30-AX & LDS30-AC

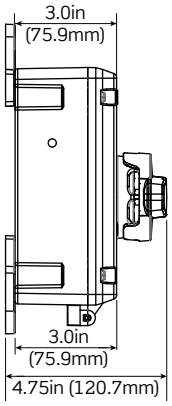

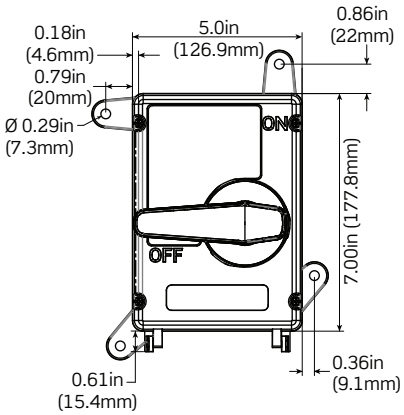

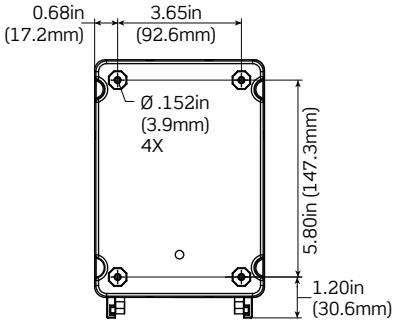

LDS30-AXC, LDS30-ACC, LDS30-AXS, LDS30-ACS, LDS30-MB, & LDS30-AMB

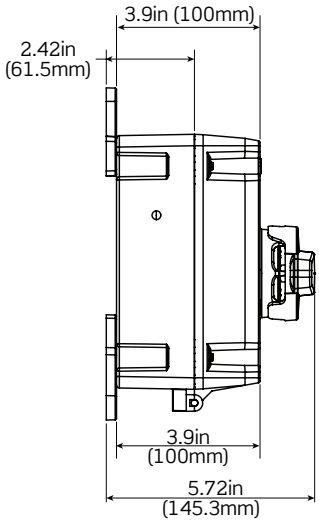

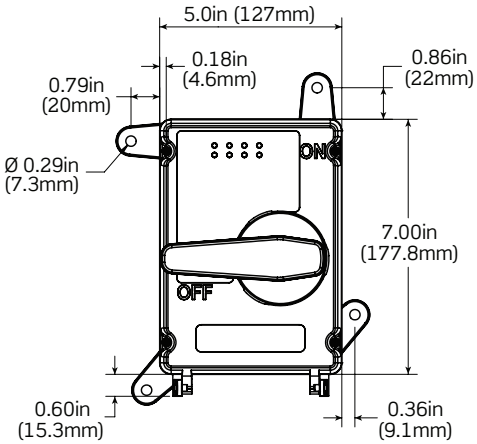

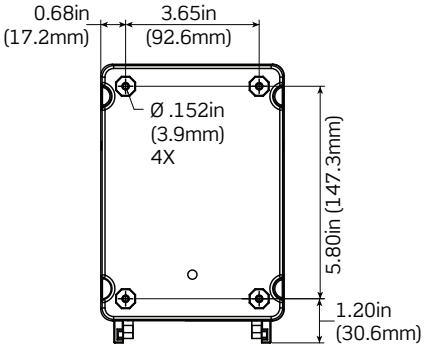

LDS30-RCS, LDS30-RCC, LDS30-RCM
(Covers Only)

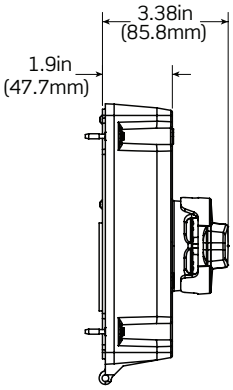

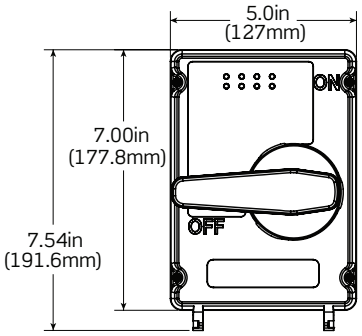

LDS30-CT, LDS30-ACT, LDS30-CTS, LDS30-CTC, & LDS30-CTM

(Depth is consistent with LDS30-AXC family devices shown in row above)

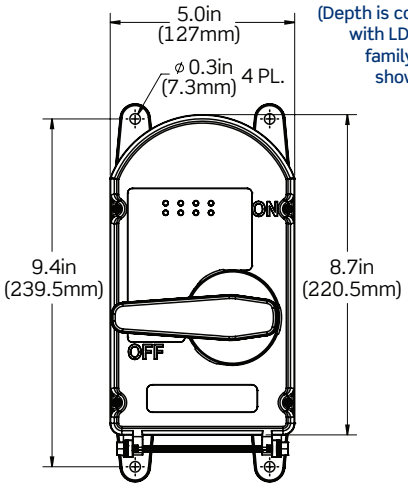

LDS30-FAX, LDS60-AX, LDS60-AC, LDS10-AX & LDS10-AC

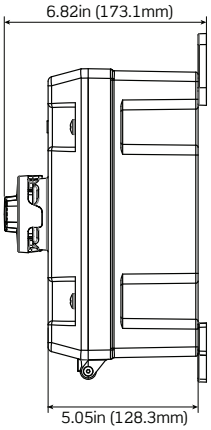

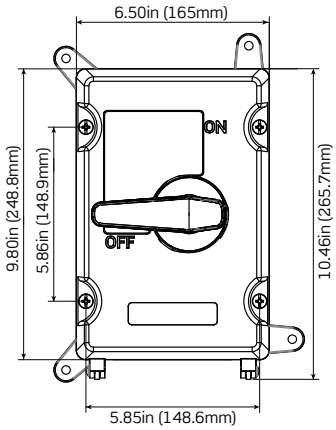

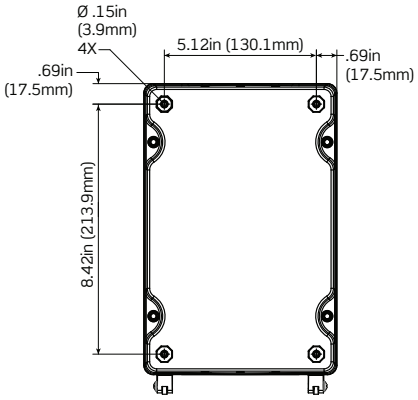

LDS60-FAX

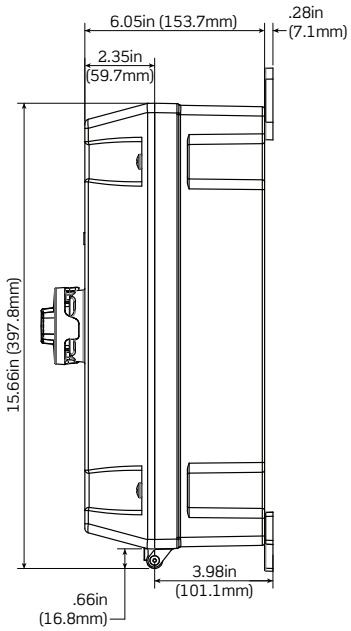

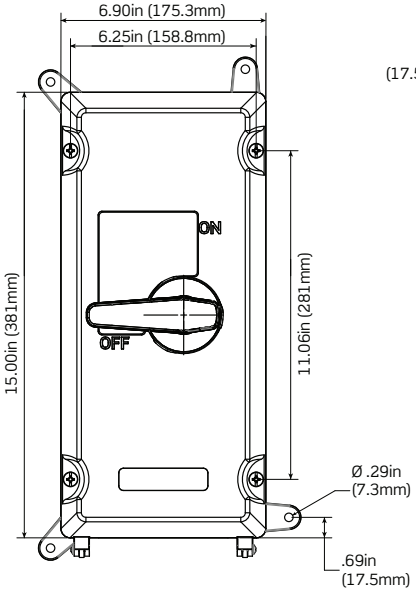

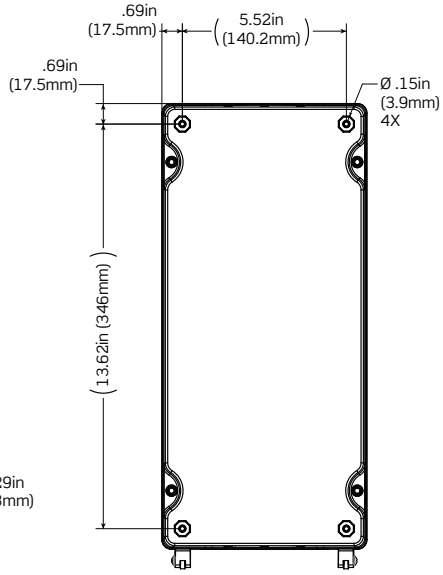

LDS10-FAX

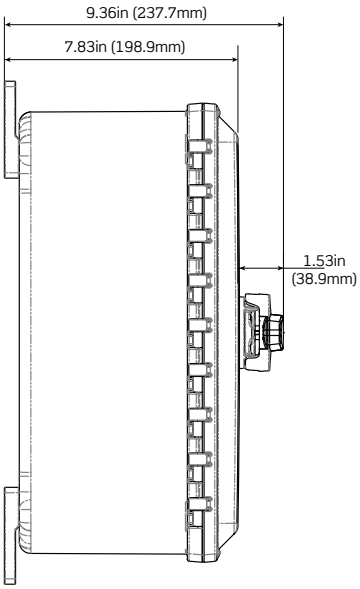

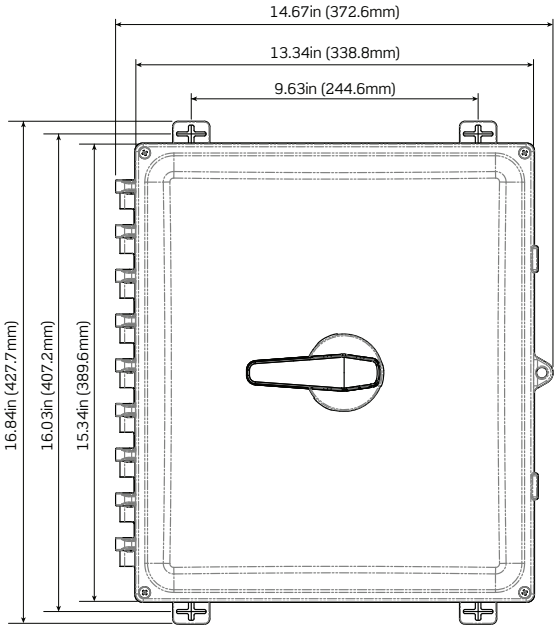

Visit our Website at:
www.leviton.com/disconnects
email: industrial@leviton.com

Leviton Manufacturing Co., Inc.
201 N Service Rd, Melville, NY 11747
Telephone: 1-800-323-8920 • FAX: 1-800-832-9538
Tech Line: 1-800-824-3005 (M-F 8AM-10PM; Sat 9AM-7PM; Sun 9AM-5PM)

© 2022 Leviton Manufacturing Co., Inc. All rights reserved.

082422