6-Port Category 6 Mobile Patch Box

PRODUCT SPECIFICATION

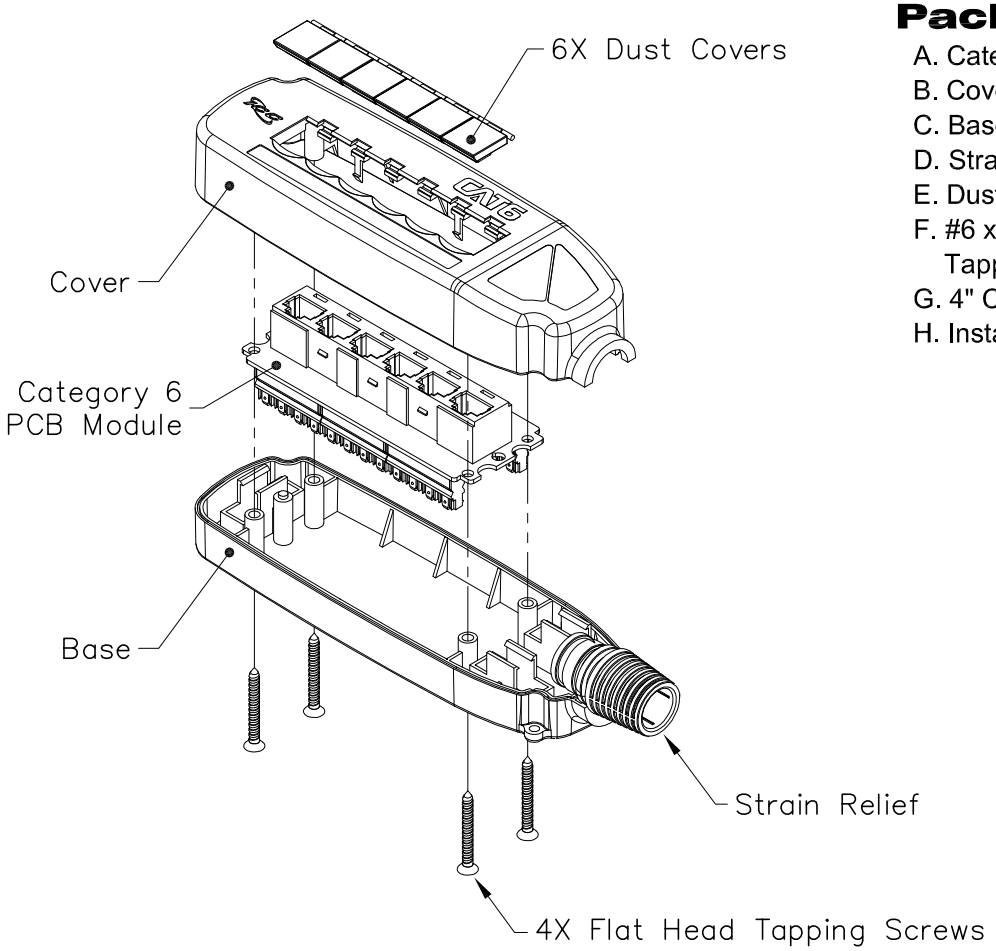

Package includes:

A. Category 6 PCB Module, 1 pc
B. Cover, 1 pc
C. Base, 1 pc
D. Strain Relief, 1 pc
E. Dust Cover, 6 pcs
F. #6 x 1 1/4" Flat Head Tapping Screw, 4 pcs
G. 4" Cable Tie, 2 pcs
H. Installation Instructions, 1 sheet

Features and Benefits:

- Provides a 6-port outlet appropriate for open architectural environments
- Suitable for use with either 4-pair or 25-pair cable
- Rugged construction allows for long lasting use
- Optional mounting on steel surface with magnets ICMAGBLOCK (not included)
- Enhanced crosstalk cancellation reduces return loss and improves performance by rejecting noise and unwanted signals
- Exceeds ANSI/TIA/EIA-568-C.2 Category 6 connecting hardware requirements
- Used with ICPCSK-series CAT 6 patch cords and ICACSPDT00 110 punch down tool
- UL listed

PATCH BOX, MOBILE, CAT 6, 6-PORT			
ITEM NO.	ICMPPMB606	REV.	B
DWG NO.	PSMPPMB606	PAGE NO.	1

ICC Premium Products Proven Performance Competitive Prices

CUSTOMER CARE / TECHNICAL SUPPORT * CSR@ICC.COM / 888-ASK-4-ICC (275-4422) * 14700 Alondra Blvd., La Mirada, CA 90638 * www.icc.com

© 2005 ICC. THIS DOCUMENT AND THE DESIGNS, SPECIFICATIONS AND INFORMATION CONTAINED HEREIN ARE THE PROPERTY OF ICC. REPRODUCTION, MODIFICATION, ALTERATION, OR UNAUTHORIZED USE WITHOUT ICC'S APPROVAL IS STRICTLY PROHIBITED. ICC AND THE ICC LOGO ARE THE TRADENAME AND REGISTERED TRADEMARK OF ICC. ALL RIGHTS RESERVED.

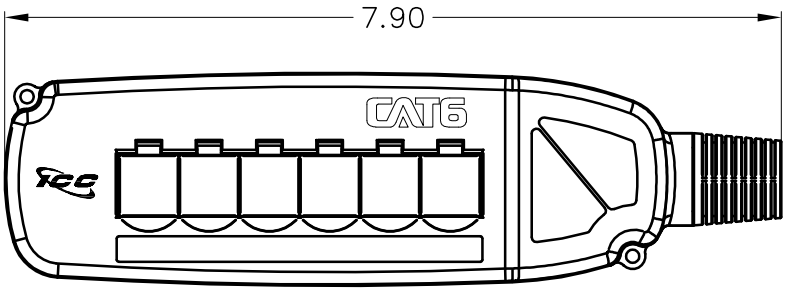

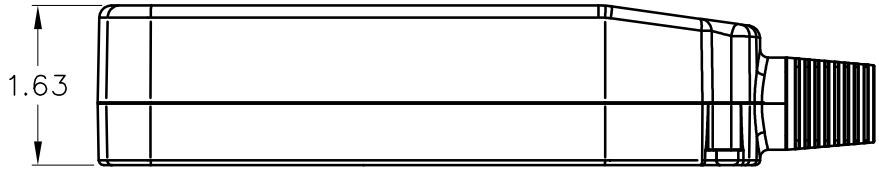

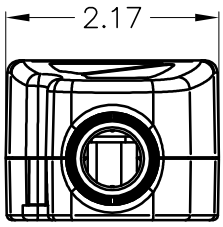

NOTE: UNLESS OTHERWISE SPECIFIED

1. CAT 6 PCB MODULE:
   A. ELECTRICAL:
      - CURRENT RATING: 1.5 AMP MAX
      - D.C. RESISTANCE: .1 OHM MAX
      - CONTACT RESISTANCE: 5 MILLIOHMS
   B. MECHANICAL:
      - MATING FORCE: 100 GRAMS MIN/CONTACT
      TEMPERATURE RANGE: -40° ~ 150°F (-40° ~ 66°C)
      - PLUG RETENTION IN JACK: 30 LBS (133N) MIN
   C. MATERIAL:
      - JACK HOUSING: ABS, UL 94V-0
      - SPRING WIRE: SQUARE SPRING WIRE, TEMPERED PHOSPHOROUS BRONZE
      - 110 CONNECTOR: COPPER ALLOY, 100 MICRO INCHES OF BRIGHT SOLDER
      OVER 100 MICRO INCHES OF NICKEL UNDERPLATE
      - GOLD RATING: 50 MICRO INCHES OF GOLD OVER 100 MICRO INCHES OF NICKEL
2. COVER AND BASE:
   A. MATERIAL: POLYPROPYLENE, UL 94V-0
   B. COLOR: BLACK
3. STRAIN RELIEF:
   A. MATERIAL: SOFT PVC, UL 94V-0
   B. COLOR: BLACK
4. DUST COVER:
   A. MATERIAL: SOFT PVC, UL 94V-0
   B. COLOR: BLACK

CATEGORY 6 CONNECTING HARDWARE REQUIREMENTS												
FREQUENCY (MHz)	1.0	4.0	8.0	10.0	16.0	20.0	25.0	31.25	62.5	100	200	250
NEXT LOSS (db)	75.0	75.0	75.0	74.0	69.9	68.0	66.0	64.1	58.1	54.0	48.0	46.0
FEXT LOSS (db)	75.0	71.1	65.0	63.1	59.0	57.1	55.1	53.2	47.2	43.1	37.1	35.1
RETURN LOSS (db)	30.0	30.0	30.0	30.0	30.0	30.0	30.0	30.0	28.1	24.0	18.0	16.0
INSERTION LOSS(db)	0.10	0.10	0.10	0.10	0.10	0.10	0.10	0.11	0.16	0.20	0.28	0.32

c UL us FILE NO. 125268

PATCH BOX, MOBILE, CAT 6, 6-PORT			
ITEM NO.	ICMPPMB606	REV.	B
DWG NO.	PSMPPMB606	PAGE NO.	2

ICC Premium Products Proven Performance Competitive Prices

CUSTOMER CARE / TECHNICAL SUPPORT * CSR@ICC.COM / 888-ASK-4-ICC (275-4422) * 14700 Alondra Blvd., La Mirada, CA 90638 * www.icc.com

© 2005 ICC. THIS DOCUMENT AND THE DESIGNS, SPECIFICATIONS AND INFORMATION CONTAINED HEREIN ARE THE PROPERTY OF ICC. REPRODUCTION, MODIFICATION, ALTERATION, OR UNAUTHORIZED USE WITHOUT ICC'S APPROVAL IS STRICTLY PROHIBITED. ICC AND THE ICC LOGO ARE THE TRADENAME AND REGISTERED TRADEMARK OF ICC. ALL RIGHTS RESERVED.