SM12XPA

12-port Multi-Gig SFP+ with (2) 10G/25G SFP28 slots
Managed Layer 3 Fiber Switch

Install Guide

Part Number 33847
Revision C June 2024

Intellectual Property

© 2022-2024 Lantronix, Inc. All rights reserved. No part of the contents of this publication may be transmitted or reproduced in any form or by any means without the written permission of Lantronix.

Lantronix is a registered trademark of Lantronix, Inc. in the United States and other countries.
All other trademarks and trade names are the property of their respective holders.

Patented: https://www.lantronix.com/legal/patents/; additional patents pending.

Warranty

For details on the Lantronix warranty policy, go to http://www.lantronix.com/support/warranty.

Contacts

Lantronix Corporate Headquarters

48 Discovery, Suite 250
Irvine, CA 92618, USA
Toll Free: 800-526-8766
Phone: 949-453-3990
Fax: 949-453-3995

Technical Support
Online: https://www.lantronix.com/technical-support/

Sales Offices
For a current list of our domestic and international sales offices, go to www.lantronix.com/about/contact.

Disclaimer

All information contained herein is provided “AS IS.” Lantronix undertakes no obligation to update the information in this publication. Lantronix does not make, and specifically disclaims, all warranties of any kind (express, implied or otherwise) regarding title, non-infringement, fitness, quality, accuracy, completeness, usefulness, suitability or performance of the information provided herein. Lantronix shall have no liability whatsoever to any user for any damages, losses and causes of action (whether in contract or in tort or otherwise) in connection with the user’s access or usage of any of the information or content contained herein. The information and specifications contained in this document are subject to change without notice.

Revision History

Date	Rev.	Comments
6/8/22	A	Initial Lantronix release at FW v v8.90.884 and HW v1.01.
10/5/22	B	Remove references to DC power and PoE. Add country-specific power cord information. Update Regulatory Agency information, labels, and package checklist.
6/19/24	C	FW v8.10.0105: Add Percepxion and LPM support. Add UKCA DoC for PS-AC-250. Add UKCA CoC for SM12XPA. Update Layer 3 modules. Add Note to verify modifications, follow these steps after upgrading FW: 1. Login to device via CLI. 2. Type the command "reload defaults". 3. Type the command "copy running-config startup-config". 4. Reboot the device.

Contents

1. Introduction 5
Product Description 5
About This Manual 5
Related Documentation 5
Ordering Information 5
Country Codes 5
Features 6
Software Features 8
Specifications 12
Front Panel 13
LED Descriptions 13
Reset Button 14
Back Panel 15
Power Supply 15
Power Supply LED 16
2. Installation 17
Package Checklist 17
Cautions and Warnings 17
Safety Instructions 17
Mounting the Switch in a 19-inch Rack 19
Mounting the Switch on Desk or Shelf 19
Connecting to the Console Port 20
Connecting to a Management Port 20
Installing SFP+/SFP28 Modules 20
Removing SFP+/SFP28 Modules 21
Power Supply Information 21
Power Supply Specifications 22
Connecting the AC Power Cord 23
Adding a Second (Optional) Power Supply 23
Power Supply Performance 24
3. Initial Switch Configuration 25
Connect and Log In to the Switch Using a Web Browser 25
Connect and Log In to the Switch Using the CLI 26
4. Related Information 27
Cautions and Warnings 27
General Troubleshooting 30
LED Troubleshooting 31
Power Consumption 32
AC Power Consumption (for one power supply) 32
AC Power Consumption (for two power supplies) 34
Regulatory Agency Information 36
FCC Regulations 36
Canadian Regulations 36

European Regulations 36
EU Declaration of Conformity (SM12XPA) 37
UKCA Certificate of Conformity (SM12XPA) 38
UK Certificate of Conformity (SM12XPA) 39
UKCA Declaration of Conformity (PS-AC-250) 40
NDAA, RoHS, REACH and WEEE Compliance 41
Box Label and Device Label 41
Record Device and System Information 42

1. Introduction

Product Description

The SM12XPA Fiber Aggregation Switch is a managed Layer 3 (L3) Multi-Gigabit Ethernet fiber switch offering powerful Layer 2 and basic Layer 3 features for improved functionality. It also supports enhanced security features such as IP source guard and Access Control Lists to guard networks against unauthorized access.

The SM12XPA switch provides 340 Gbps switching capacity with (12) 1G/10G SFP+ and (2) 1G/10G/25G SFP28 slots and (1) RJ-45 console port. It offers high performance and reliability for high bandwidth aggregation and access network applications. The embedded Device Managed System (DMS) software is easy to use and simplifies configuration, installation, and troubleshooting of devices in applications with high fiber density. The SM12XPA offers an improved user experience, and lowers operating and maintenance costs.

About This Manual

This manual describes how to install, configure, and troubleshoot the switch, including how to:

- Install the switch
- Check switch status by reading the LED behavior
- Reset the switch or restore it to factory defaults
- Use a Web browser or the CLI to initially configure the switch
- Troubleshoot the switch

Note that this manual provides links to third part web sites for which Lantronix is not responsible.

Related Documentation

- SM12DPXA Quick Start Guide, 33846
- SM12DPXA Install Guide, 33847 (this manual)
- SM12DPXA Web User Guide, 33848
- SM12DPXA CLI Reference, 33849
- Release Notes (version specific)

Ordering Information

SKU	Description
SM12XPA-xx	Managed Layer 3 fiber switch, (12) multi-Gig SFP+ slots with (2) 10G/25G slots, (19" rack mount kit and country-specific power cord included). AC Input: Fixed Single PSU: 100-240 VAC, 50~60 Hz. See "country Codes" description below.
PS-AC-250-xx	Optional second Power Supply; 12V/250W; includes one country-specific power cord; Efficiency: Bronze (order separately). See "Country Codes" description below.
SFP+ / SFP28	See our SFP product page (optional – order separately)

Country Codes

To order the corresponding country specific switch or power supply, add the extension from this list to the end of the SKU: -xx = Country Code; -NA = North America, -LA = Latin America, -EU = Europe, -UK = United Kingdom, -SA = South Africa, -JP = Japan, -OZ = Australia, -BR = Brazil.

Features

- CFM, APS, Keychain, TSN, TAS
- Jumbo frames up to 10K bytes
- DHCP Relay, DHCP Option 82, DHCP Snooping, DHCP Server
- DHCP Client, Relay, Option 66, Option 67, Option 82
- Full Layer 2 features
- IPv4/IPv6 Layer 3 Static Routing
- RIP v1/v2 Layer 3 Dynamic Routing
- OSPFv2 Layer 3 Dynamic Routing
- IEEE 1588v2 Precision Time Protocol (PTP)
- ITU-T G.8031 Ethernet Linear Protection Switching (EPS)
- ITU-T G.8032 Ethernet Ring Protection Switching (ERPS)
- DHCP Server
- Supports Jumbo Frame up to 10K bytes
- Dual hot-swappable AC power supplies (with optional second power supply)
- Percepxion and LPM support
- NDAA and TAA Compliant

Layer 2 Switching

- Spanning Tree (STP), Rapid Spanning Tree (RSTP), and Multiple Spanning Tree (MSTP)
- Link Aggregation Control Protocol (LACP)
- VLANs (supports up to 4K VLANs): Port based VLAN, 802.1Q tag-based VLAN, MAC-based VLAN, Management VLAN, Private VLAN Edge (PVE), Q-in-Q (double tag) VLAN, Voice VLAN, GARP VLAN Registration Protocol (GVRP)
- DHCP Relay
- IGMP v1.v2/v3 Snooping / IGMP Querier / IGMP Proxy
- MLD v1/v2 Snooping

Layer 3 Switching

- IPv4/IPv6 Static Routing, RIP v1/v2, OSPF v2

Security

- SSH v1 and v2 / SSL
- Authentication - RADIUS, TACACS+
- IP Source Guard, Port Security
- Storm Control
- DHCP Snooping
- L2/L3/L4 ACLs Support MAC, VLAN ID, or IP address, protocol, per port

Quality of Service

- QoS: supports 8 hardware queues. Strict priority and WRR, Ingress policer, Egress shaping and per port rate control
- Port based, 802.1p VLAN priority based , IPv4/IPv6/DSCP based and DiffServ classification

Management

- DHCP Server
- RMON groups 1,2,3,9
- Port Mirroring
- UPnP
- s-Flow
- LLDP (Link Layer Discovery Protocol)
- Web Management, SNMP V1/V2c/V3, HTTP/HTTPs, SSH, CLI
- Firmware Update via TFTP and HTTP/HTTPs
- DHCP Client
- Cable Diagnostics
- Syslog

Synchronization

- Precision Time Protocol (PTP) / NTP

Loop Protection

- ITU-T G.8031 Ethernet Linear Protection
- ITU-T G.8032 Ethernet Ring Protection Switching
- Loop Detection and Protection

Device Management System (DMS)

- Graphical Monitoring – Topology view, Floor view, Map view
- Traffic Monitoring – Shows a chart of network performance the devices – all the ports or a specific port
- Troubleshooting – Network diagnostic, protection mechanism, performance and link management
- Firmware Upgrades, Find Switch, Notifications, and Monitoring/Polling via DMS

Software Features

Layer 2 Switching	
Management	Web, SNMP v1/v2/v3c, SSH. CLI, RESTful API
Spanning Tree	Supports IEEE 802.1s MSTP, IEEE 802.1w RSTP, and IEEE 802.1d STP
Spanning Tree Protocol (STP)	• Standard Spanning Tree 802.1d • Rapid Spanning Tree (RSTP) 802.1w • Multiple Spanning Tree (MSTP) 802.1s
Port Trunk	Support IEEE 802.3ad port trunk with link aggregation control protocol (LACP) and static trunk
Trunking	Link Aggregation Control Protocol (LACP) IEEE 802.3ad
Multicast	Support IGMP Snooping v1/v2/v3, IGMP Querier, IGMP Proxy, MLD Snooping v1/v2
VLAN	Port-based VLAN, IEEE 802.1Q tag based, up to 4k VLAN entries, Q-in-Q. MAC-based VLAN, Management VLAN, Private VLAN, Voice VLAN
VLAN	Supports up to 4K VLANs simultaneously (out of 4096 VLAN IDs) • Port-based VLAN • 802.1Q tag-based VLAN • MAC-based VLAN • Management VLAN • Private VLAN Edge (PVE) • Q-in-Q (double tag) VLAN • Voice VLAN • GARP VLAN Registration Protocol (GVRP)
DHCP Relay	• Relay of DHCP traffic to DHCP server in different VLAN. • Works with DHCP Option 82
IGMP v1/v2/v3 Snooping	IGMP limits bandwidth-intensive multicast traffic to only the requesters. Supports 1024 multicast groups
IGMP Querier	IGMP querier is used to support a Layer 2 multicast domain of snooping switches in the absence of a multicast router
IGMP Proxy	IGMP snooping with proxy reporting or report suppression actively filters IGMP packets in order to reduce load on the multicast router
MLD v1/v2 Snooping	Delivers IPv6 multicast packets only to the required receivers
Quality of Service (QoS)	Support 8 hardware queues. Scheduling: Strict priority and WRR, Queue assignment based DSCP and class of service Classification: Port based, 802.1p VLAN priority based, IPv4/IPv6 precedence/ DSCP based, DiffServ, Classification and re-marking ACLs Rate Limiting: Ingress policer, Egress shaping, rate control and per port
CFM	Connectivity Fault Management (CFM) is an IEEE 802.1ag and ITU Y.1731 standard for managing connectivity at the Ethernet service level.
APS	Ethernet Automatic Protection Switching (APS) is a linear protection scheme designed to protect VLAN based Ethernet networks.
Keychain	A keychain is a sequence of keys that provides dynamic authentication to ensure secure communication by periodically changing the key and authentication algorithm without service interruption. When the system time is within the lifetime of a key in a keychain, an application uses the key to authenticate incoming and outgoing packets. The keys in the keychain take effect one by one according to the sequence of the configured lifetimes. In this way, the authentication algorithms and keys are dynamically changed to implement dynamic authentication.

TSN	The Time-Sensitive Networking (TSN) Task Group (TG) is a part of the IEEE 802.1 Working Group (WG). The charter of the TSN TG is to provide deterministic services through IEEE 802 networks (i.e., guaranteed packet transport with bounded latency, low packet delay variation, and low packet loss).
TAS	A time-triggered scheduling mechanism called Time-Aware Shaper (TAS) is one of the IEEE802.1 Standards. TAS uses a parameter called a Gate Control List (GCL) to control each class of stream or traffic.

Layer 3 Switching	
IPv4 L3 Static routing	IPv4 Unicast: Static routing. Static routing is a form of routing where a router uses a manually-configured routing entry, rather than information from dynamic routing traffic.
IPv6 L3 Static routing	IPv6 Unicast: Static routing. Routing protocols interfaces can be dynamically or statically assigned. Static network routing has benefits and drawbacks as compared to implementing dynamic routing protocols
RIP v1/v2 L3 Dynamic routing	Routing Information Protocol (RIP) protocols are intra-domain (interior) routing protocols based on distance vector routing and used inside an autonomous system. For more information see RIP v1: IETF RFC 1923 or RIP v2 2: IETF RFC 2543.
OSPF v2 L3 Dynamic routing	OSPF is a link-state routing protocol designed to be run internal to a single Autonomous System. Each OSPF router maintains an identical database describing the Autonomous System's topology. From this database, a routing table is calculated by constructing a shortest-path tree. For more OSPF v2 information see IETF RFC 2328.
OSPF	Open Shortest Path First (OSPF) is a link-state routing protocol. It is designed to be run internal to a single Autonomous System. Each OSPF router maintains an identical database describing the Autonomous System's topology. From this database, a routing table is calculated by constructing a shortest-path tree.
RIP	The Routing Information Protocol (RIP) protocol lets routers exchange network topology information. It is considered an interior gateway protocol, typically used in small to medium-sized networks.

Security	
Secure Shell (SSH)	SSH secures Telnet traffic in or out of the switch, SSH v1 and v2 are supported
Secure Sockets Layer (SSL)	SSL encrypts the http traffic, allowing advanced secure access to the browser-based management GUI in the switch
IEEE 802.1X	• IEEE802.1X: RADIUS authentication, authorization and accounting, MD5 hash, guest VLAN, single/multiple host mode and single/multiple sessions • Supports IGMP-RADIUS based 802.1X • Dynamic VLAN assignment
Layer 2 Isolation Private VLAN Edge	PVE (also known as protected ports) provides L2 isolation between clients in the same VLAN. Supports multiple uplinks
Port Security	Locks MAC addresses to ports, and limits the number of learned MAC address
IP Source Guard	Prevents illegal IP address from accessing to specific port in the switch
RADIUS/ TACACS+	Supports RADIUS and TACACS+ authentication. Switch acts as a client
Storm Control	Prevents traffic on a LAN from being disrupted by a broadcast, multicast, or unicast storm on a port

DHCP Snooping	A feature that acts as a firewall between untrusted hosts and trusted DHCP servers
ACLs	Supports up to 256 entries. Drop or rate limitation based on: • Source and destination MAC, VLAN ID or IP address, protocol, port, • Differentiated services code point (DSCP) / IP precedence • TCP/ UDP source and destination ports • 802.1p priority • Ethernet type • Internet Control Message Protocol (ICMP) packets • TCP flag

Quality of Service (QoS)	
Hardware Queue	Supports 8 hardware queues
Scheduling	• Strict priority and weighted round-robin (WRR) • Queue assignment based on DSCP and class of service
Classification	• Port based • 802.1p VLAN priority based • IPv4/IPv6 precedence / DSCP based • Differentiated Services (DiffServ) • Classification and re-marking ACLs
Rate Limiting	• Ingress policer • Egress shaping and rate control • Per port
Management	
DHCP Server	Support DHCP server to assign IP to DHCP clients
Remote Monitoring (RMON)	Embedded RMON agent supports RMON groups 1,2,3,9 (history, statistics, alarms, and events) for enhanced traffic management, monitoring and analysis
Port Mirroring	Traffic on a port can be mirrored to another port for analysis with a network analyzer or RMON probe. Up to N-1 (N is Switch's Ports) ports can be mirrored to single destination port. A single session is supported.
UPnP	The Universal Plug and Play Forum was formed to standardize discovery and control of networked devices. See the Open Connectivity Foundation webpage.
s-Flow	The industry standard for monitoring high speed switched networks. It gives complete visibility into the use of networks enabling performance optimization, accounting/billing for usage, and defense against security threats
IEEE 802.1ab (LLDP)	• Used by network devices for advertising their identities, capabilities, and neighbors on an IEEE 802ab local area network • Support LLDP-MED extensions
Web GUI	Built-in switch configuration utility for browser-based device configuration
CLI	For users to configure/manage switches in command line modes
Dual Image	Independent primary and secondary images for backup while upgrading
SNMP	SNMP version1, 2c and 3 with support for traps, and SNMP version 3 user-based security model (USM)

Firmware Upgrade	• Web browser upgrade (HTTP/ HTTPs) and TFTP • Upgrade through console port as well
Other Management	• HTTP/HTTPs; SSH • DHCP Client/ DHCPv6 Client • Cable Diagnostics • Ping • Syslog • Telnet Client • IPv6 Management

Synchronization	
IEEE 1588v2 PTP	Support IEEE 1588 v2 PTP (Precision Time Protocol)
NTP	Network Time Protocol (NTP) is a networking protocol for clock synchronization between computer systems over packet-switched

Loop Protection	
ITU-T G.8031	Supports ITU-T G.8031 Ethernet Linear Protection Switching
ITU-T G.8032	Supports ITU-T G.8032 Ethernet Ring Protection Switching
Loop Detection	Supports Loop Detection and Protection

Device Management System (DMS)	
Graphical Monitoring	• Topology view: Intuitive way to configure and manage switches and devices with visual relations • Floor view: Easily drag and drop managed devices to help build smart workforces • Map view: Enhance efficiency to drag and drop devices and monitor surroundings on Google Maps
Traffic Monitoring	Displays a chart of network traffic of all devices and monitors every port at any time.
Troubleshooting	• Network diagnostic between master switch and devices • Support protection mechanism, such as rate-limiting to protect your devices from brute-force downloading

Management and Discovery/Provisioning	
Percepxion Centralized Device Management	Percepxion is Lantronix cloud-hosted or on-premise management platform that provides a single pane of glass for centralized management and automated monitoring of deployed Lantronix devices, plus real-time notifications, managed APIs and data dashboards.
LPM Centralized Discovery and Provisioning	Lantronix Provisioning Manager (LPM) software application provisions, configures and updates Lantronix devices for local site installations and deployments. LPM discovery is enabled by default and is not configurable. For more LPM information see https://www.lantronix.com/products/lantronix-provisioning-manager/. Free download from Lantronix website.

Specifications

Standards	IEEE 802.3™, IEEE 802.3z, IEEE 802.3ae, IEEE 802.3x, IEEE 802.3ad, IEEE 802.1D, IEEE 802.1w, IEE 802.1s, IEEE 802.1Q, IEEE 802.1p, IEEE 802.1AB, IEEE 1588v2, IEEE 802.1d, EEE 802.1s, IEEE 802.1X, IEEE 802.1ab, IEEE 1588 v2, IEEE 802.1ad, ITU-T G.8031, ITU-T G.8032
Protocols	CSMA/CD, Store-and-forward switching architecture
Port Configuration	Total Ports: 14. SFP+ (1G/10G) ports: 12. SFP28 (1G/10G/25G): 2. Console: 1 RJ45.
MAC Addresses	32K MAC address table
Backplane	340 Gbps
Forwarding	252.876Mpps
Jumbo Frames	10K Bytes
Dimensions	Width: 17.4” [442 mm] x Depth: 11.8” [300 mm] x Height: 1.7” [44 mm]
Weight	8.45 Lbs. (3.82 Kg.)
Power Input	Hot-Swappable Dual (optional) AC PSUs / 100-240 VAC, 50~60 Hz
Power Consumption	See the Power Consumption section
Operating Temp	0°C to +50°C
Storage Temp	-20 to +70°C
Humidity	up to 95%
Altitude	< 3000m
MTBF	Environment: GB, GC - Ground Benign, Controlled. Temperature: 50.00° C. MTBF: 101,026 Hrs.
Warranty	5 years

Front Panel

The front panel provides the ports, LEDs and a Reset button as shown and described below.

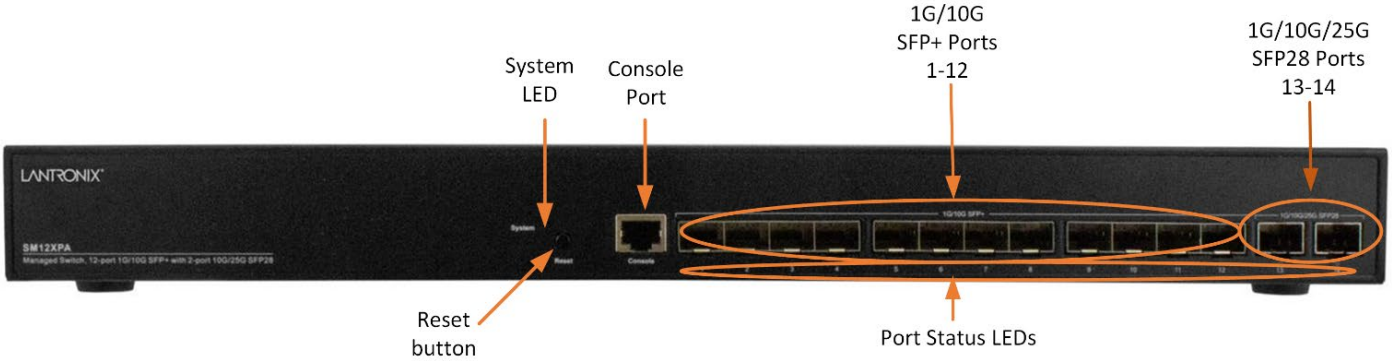

LED Descriptions

The LEDs on the front panel allow switch status checking and monitoring as follows.

System LED: Indicates if the switch is powered up correctly or indicates if there is a system alarm triggered for troubleshooting.

Port Status LEDs: Indicate the current status of each port.

The following tables detail the functions and descriptions of various LED indicators.

Table 1: System LED

LED	Color	State	Description
System	Green	On	The switch is powered on correctly.
		Off	The switch is not receiving power.
	Red	On	An abnormal state, such as exceeding operating temperature range, has been detected in the switch.

Table 2: Port Status LEDs

LED	Color	State	Description
SFP/SFP+ Ports 1-12	Green	On	The port is enabled and has established a link to a connected device, and the connection speed is 10Gbps.
		Blinking	The port is transmitting / receiving packets, and the connection speed is 10Gbps
	Amber	On	The port is enabled and has established a link to connected device, and the connection speed is 1Gbps/10Gbps.
		Blinking	The port is transmitting/receiving packets, and the connection speed is 1Gbps/10Gbps.
	--	Off	The port has no active network cable connected, or it has not established a link to a connected device. Otherwise, the port may have been disabled via the switch user interface.

SFP28 Ports 13-14	Green	On	The port is enabled and has established a link to a connected device, and the connection speed is 25Gbps.
		Blinking	The port is transmitting/receiving packets, and the connection speed is 25Gbps.
	Amber	On	The port is enabled and has established a link to a connected device, and the connection speed is 1G/10G/25Gbps.
		Blinking	The port is transmitting/receiving packets, and the connection speed is 1G/10G/25Gbps.
	--	Off	The port has no active network cable connected, or it has not established a link to a connected device. Otherwise, the port may have been disabled via the switch user interface.

SFP+ and SFP28 Port green LEDs on

SFP+ Port amber LEDs on

SFP28 Port amber LEDs on

Power module LEDs on

Reset Button

By pressing the Reset button for a certain period of time, you can perform these tasks:

Reset switch: Reboot and get the switch back to the previously saved configuration settings.

Restore switch: Restore the switch to original factory default settings.

Note: Use the table below to determine which task is being performed by reading the LED behaviors while pressing the Reset button. When the LED behaviors are correctly displayed, just release the button.

Table 3: Reset Button Descriptions

Task to be Performed	Press Reset button for	SYS LED Behavior	Port Status LED Behavior
Enter POST Mode	Less than 2 seconds, then Power On	--	--
Reboot Switch	2 ~10 seconds	Blinking Green	All Ports LEDs Off
Restore to Default	More than 10 seconds	Blinking Green	All Ports Solid On

Back Panel

The back panel provides for one or two hot-swappable power supplies for powering the switch and an airflow opening. The switch ships with one power supply standard; order the secondary power supply module for the maximum power. **Caution**: Be sure to leave adequate room for the airflow opening.

Power Supply

The PS-AC-250 power supply is shown and described below.

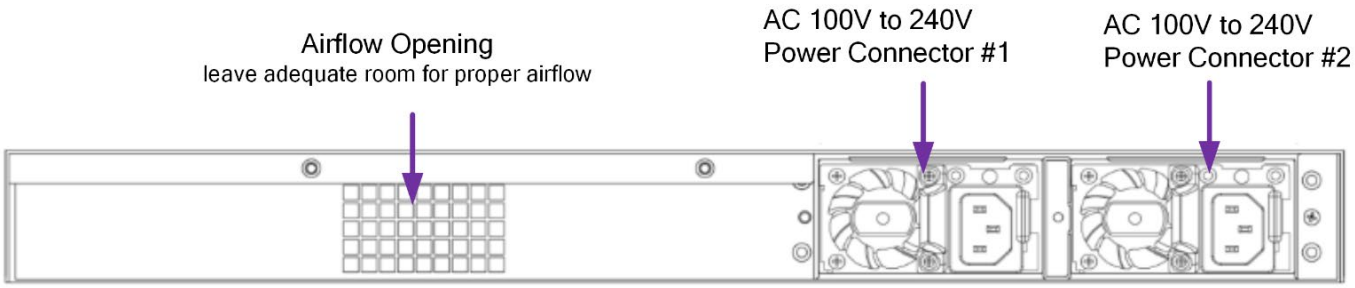

Back Panel with Optional Dual Hot Swap Power Supplies

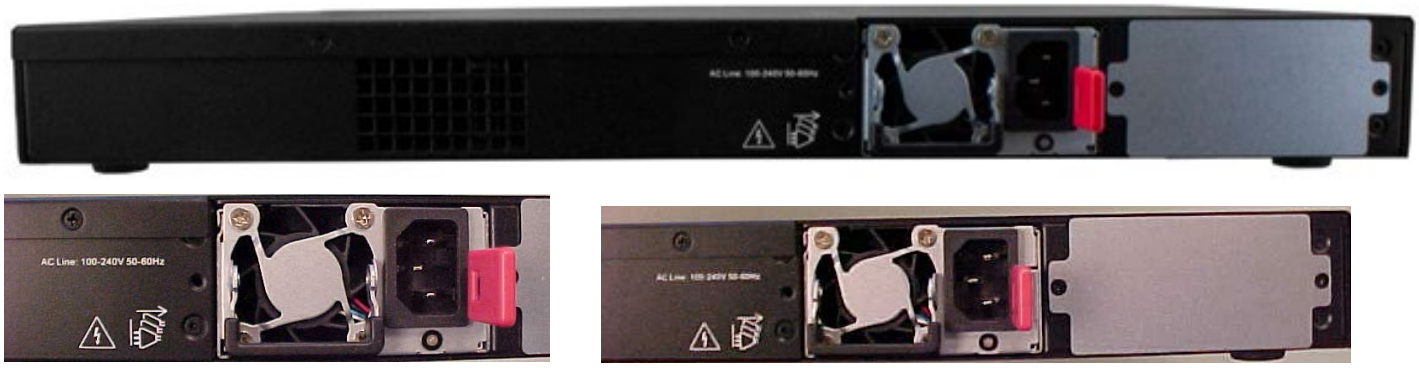

Back Panel with Single Hot Swap Power Supply

Anti-shock; shock-proof **Hot Swappable**

Power Supply LED

The PS-AC-250 power supply LED is shown and described below.

PS-AC-250 LED:

LED State	Power Supply Condition
Green	Output On and OK
Off	No AC power to all power supplies
1Hz Blinking Green	AC present / Only 12VSB On (PS off) or PS in Smart On state
Amber	AC cord unplugged or AC power lost; with a second power supply in parallel still with AC input power.
1Hz Blinking Amber	Power supply warning events where the power supply continues to operate (high temp, high power, high current, slow fan).
Amber	Power supply critical event causing a shutdown (Failure, OCP, OVP, Fan Fail)

2. Installation

Before beginning installation read the Cautions and Warnings below.

Package Checklist

Verify that you have received the following items. Contact your sales representative if any item is missing or damaged. Please save the packaging for possible future use.

- The Switch
- One Power Supply (in the box but not installed)
- One AC Power cord
- Four adhesive rubber feet
- Printed Quick Start Guide
- 19” Rack Mount Kit
- RJ45 to DB9 Serial Console Cable

Power Cord Included: To order the corresponding country-specific power cord, add the extension to the end of the SKU: SM12XPA-NA = North America, AL = North America locking right angle, LA = Latin America, EU = Europe, UK = United Kingdom, SA = South Africa, JP = Japan, OZ = Australia, BR = Brazil.

Cautions and Warnings

The following conventions are used in this manual to emphasize information important to the reader.

Danger : The described activity or situation might or will cause personal injury.

Warning : The described activity or situation might or will cause equipment damage.

Caution : The described activity or situation might or will cause service interruption.

Note : The information supplements the text or highlights important points.

Safety Instructions

When a connector is removed during installation, testing, or servicing, or when an energized fiber is broken, a risk of ocular exposure to optical energy that may be potentially hazardous occurs, depending on the laser output power. The primary hazards of exposure to laser radiation from an optical-fiber system are:

- Damage to the eye by accidental exposure to a beam emitted by a laser source.
- Damage to the eye from viewing a connector attached to a broken fiber or an energized fiber.

Warnings :

1. The switch is an indoor device. If you must use it to connect outdoor devices such as outdoor IP cameras or outdoor WiFi Aps with cable, you must install an arrester on the cable between outdoor device and the switch.

Add an arrester between outdoor device and this switch

2. The marking information is located at the bottom of apparatus (IEC 62368-1).
3. The equipment is not suitable for use in locations where children are likely to be present.
4. Restricted access location.

Danger: Never attempt to view optical connectors that might be emitting laser energy.
Do not power up the laser product without connecting the laser to the optical fiber and putting the cover in position, as laser outputs will emit infrared laser light at this point.

Mounting the Switch in a 19-inch Rack

1. Attach the mounting brackets to both sides of the chassis. Insert screws and tighten them with a screwdriver to secure the brackets.

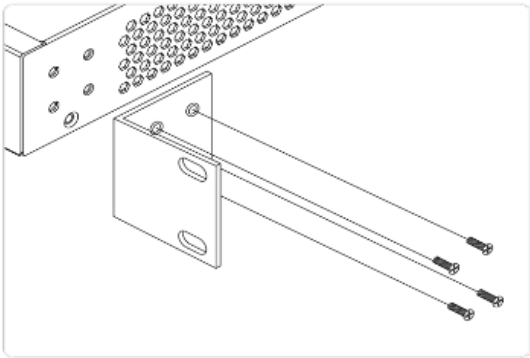

Attaching Brackets to the Switch

2. Place the switch on a rack shelf in the rack. Push it in until the oval holes in the brackets align with the mounting holes in the rack posts.
3. Attach the brackets to the posts. Insert screws and tighten them.

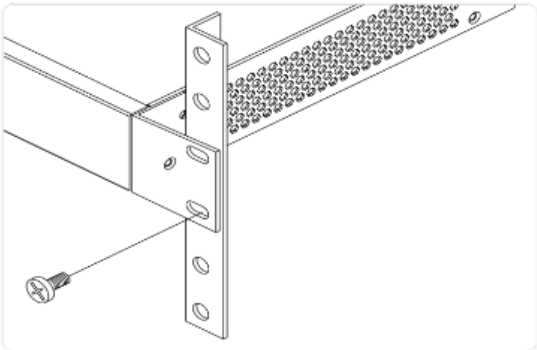

Attaching Brackets to the Rack Post

Mounting the Switch on Desk or Shelf

1. Verify that the work surface is sturdy and reliably grounded.
2. Attach the four adhesive rubber feet to the bottom of the switch.

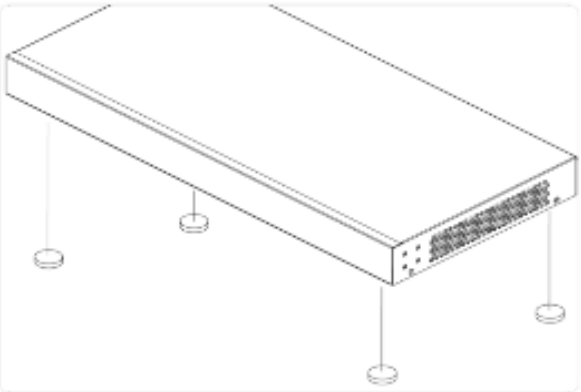

Attaching the Rubber Feet

Connecting to the Console Port

Use the provided RJ45 to DB9 Serial Console Cable to connect a PC to the switch Console port. The Console port is for local management by using a terminal emulator or a computer with terminal emulation software.

- DB9 connector connect to PC COM port
- Baud rate: 115200bps
- 8 Data bits, 1 Stop bit
- Priority: None
- Flow control: None

Connecting to a Management Port

There is no dedicated Management port, just one Console port (RJ45) and 14 SFP ports. You need to have a fiber NIC to directly connect your PC to this switch. Otherwise, you need to have another management switch between your PC and the switch.

Installing SFP+/SFP28 Modules

Note: see the related SFP device manual for important Safety warnings. See the Lantronix SFP page for our full line of SFP transceivers. See the FOA webpage for additional information. The Fiber Optic Association, Inc.is an international non-profit educational association chartered to promote professionalism in fiber optics through education, certification and standards. **Note**: The SFP+/SFP28 ports should use UL Listed Optional Transceiver products, Rated 3.3Vdc, Laser Class 1.

Before you begin installing SFP+/SFP28 modules, observe these guidelines:

- Do not remove the rubber caps from the fiber-optic cable until you are ready to connect the cable. The plugs and caps protect the module ports and cables from contamination and ambient light.
- To prevent ESD damage, follow your normal board and component handling procedures when connecting cables to the switch and other devices.

Caution: Removing and installing an SFP+/SFP28 module can shorten its useful life. Do not remove and insert any SFP module more often than is absolutely necessary.

You can install or remove a mini-GBIC SFP+/SFP28 module from an SFP+ or SFP28 port without having to power off the switch.

1. Insert the module into the SFP+/SFP28 port.
2. Press firmly to ensure that the module seats into the connector.

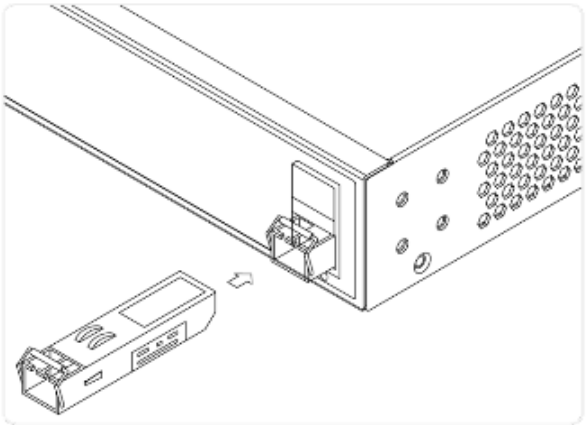

Installing an SFP+/SFP28 Module into an SFP+ Port

Removing SFP+/SFP28 Modules

1. Attach an ESD-preventive wrist strap to your wrist and to a bare metal surface.
2. Disconnect the cable from the SFP+ module. For reattachment, note which cable connector plug is send (TX) and which is receive (RX).
3. Insert a dust plug into the optical ports of the SFP+/SFP28 module to keep the optical interfaces clean.
4. If the module has a bale-clasp latch, pull the bale out and down to eject the module. If the latch is obstructed and you cannot use your finger, use a small, flat blade screwdriver or other long, narrow instrument to open the latch.
5. Grasp the SFP+/SFP28 module and carefully remove it from the module slot.
6. Place the module in an antistatic bag or other protective environment.

Power Supply Information

The SM12XPA ships with one AC power supply (100V-240V AC Input) in the box with the switch but not installed. An optional second power supply may be ordered separately. Total 250W Max.

Warning : Insert the power supply with the label up (edge connectors down). Otherwise, the power supply can be easily damaged.

Warning : Connect only to a properly earth grounded outlet.

Power Supply Specifications

Output Power		PS-AC-250
Output	Output Voltage	12V
	Output Current	0.1A ~ 20.8A
	Voltage Tolerance	11.40V ~ 12.60V
	Ripple and Noise	120mV
	Hold-up Time	16mS
	Rise Time	70mS
Input	Efficiency (20% / 50% / 100% Loading)	Bronze (81% / 85% / 81%)
	Input Voltage Range	90 ~ 140VAC 180 ~ 264VAC
	Frequency Range	47 ~ 63Hz
	Input Current	4A (115VAC) 2A (230VAC)
	Inrush Current (25℃ Cold start)	55A
	Leakage Current (max.)	1.6mA
	Power Factor Correction (PFC) (Test at 115VAC)	0.75(20%), 0.90(50%), 0.95(100%)
Protection	Over Voltage (OVP)	Y
	Over Current (OCP)	Y
	Over Temperature (OTP)	Y
	No Load Operation	
	Short Circuit (SCP)	Y
Operating Temperature		0 ~ 50℃
Operating Humidity		5~90% RH
Altitude		5000M
EMI	Radiated	A
	Conducted	A
EMS	EN 61000-4-2 ESD 4KV/8KV	Criteria A
	EN 61000-4-4 EFT +/-2KV	Criteria A
	EN 61000-4-5 Surge	Criteria A
Dimensions	L*W*H (mm)	185 * 73.3 * 39
MTBF (hours)	Bellcore SR-332	1,448,747 hrs (25℃)
Max. Fan Speed		17600 RPM ±10%
FAN Speed Control		Y
Acoustic Level (max.)		50dB (@50℃)
LED	Bi-Color LED	Amber/Green *1

Connecting the AC Power Cord

1: Connect the AC power cord to the AC power receptacle of switch.

2: Connect the other end of the AC power cord to the AC power outlet.

3: Check the SYS LED. If it is ON, the power connection is correct.

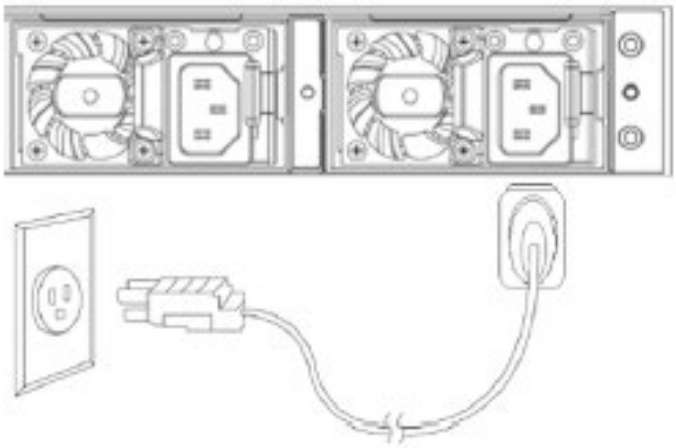

Connecting AC Power Cord

Adding a Second (Optional) Power Supply

The SM12XPA ships with one 250W power supply installed. Use the procedure below to install a second power supply.

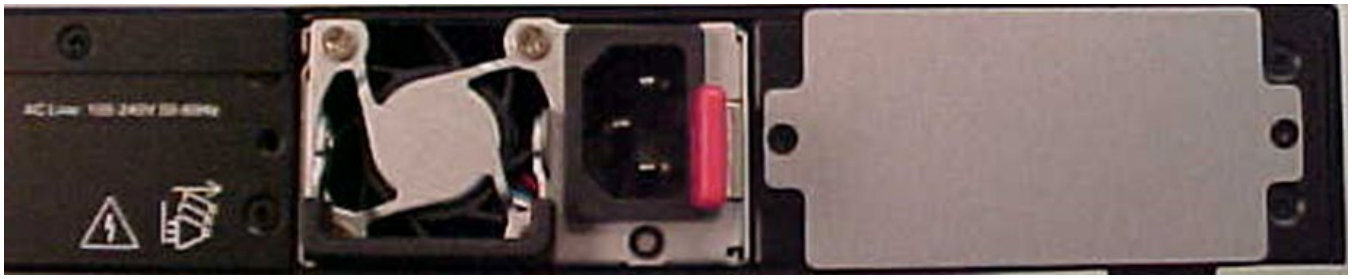

Procedure:

1. Use a small Phillips head screwdriver to remove the two faceplate mounting screws. Keep the screws and faceplate for possible future use.
2. Check for proper power supply orientation (label up/connectors down) and carefully slide the second PS into the open PS slot. Warning : Insert the power supply with the label up (edge connectors down). Otherwise, the power supply can be easily damaged.
3. Push the second power supply fully into the slot until it “clicks” into place.
4. Power up the two power supply modules.

Power Supply Performance

The switch has one power supply by default. It offers a second supply as an option, as shown in the web UI:

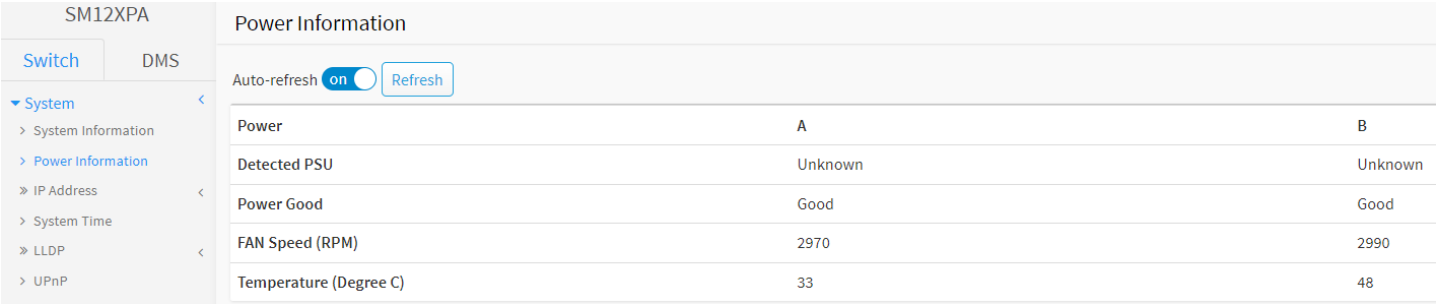

Power	A	B
Detected PSU	Unknown	Unknown
Power Good	Good	Good
FAN Speed (RPM)	2970	2990
Temperature (Degree C)	33	48

With both power supplies installed they operate in High Availability mode (one is in active mode and the other is in standby mode).

3. Initial Switch Configuration

Connect and Log In to the Switch Using a Web Browser

After powering up the switch for the first time, you can perform the initial switch configuration using a web browser. For managing other switch features, please refer to the Web User Guide for details.

To begin with the initial configuration stage, you must reconfigure your PC's IP address and subnet mask to make sure the PC can communicate with the switch. After changing PC's IP address (for example, 192.168.1.250), you can access the switch Web UI using the switch's default IP address as shown below.

Note: The switch factory default IP address is 192.168.1.77. The factory default Subnet Mask is 255.255.255.0.

Initial Switch Configuration Procedure:

1. Power up the PC that you will use for the initial configuration.

2. Reconfigure the PC's IP address and Subnet Mask so that it can communicate with the switch.

3. Power up the switch to be initially configured and wait until it has finished its start-up processes.

4. Connect the PC to a port on the switch; either:

a. You need a fiber NIC on your computer to connect to the switch. This can be a 1G/10G or 25G NIC card.

or

b. You can use another switch in between your computer and the SM12XPA. Use a copper cable / SFP between your computer and a switch that has 1G or 10G SFP port and then connect the switch to the SM12XPA.

5. Check the port LED on the switch to make sure the link status of the PC is OK.

6. Run your Web browser on the PC; enter the factory default IP address to access the switch Web interface.

If your PC is configured correctly, the switch Login page displays as shown in the figure below.

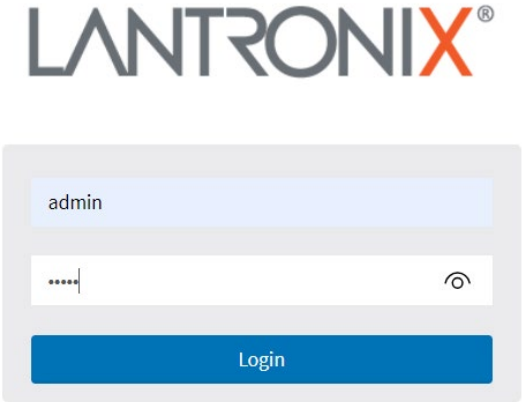

Web UI Login page

If you do not see the above Login page, perform these steps:

- Refresh the web page.
- Check for an IP address conflict issue.
- Clear browser cookies and temporary internet files.
- Check your PC settings again and repeat step 2.

7. Enter the factory default username and password (both admin) in the Login page and click "Login" to log into the switch. See the *SM12XPA Web User Guide* for more information.

Connect and Log In to the Switch Using the CLI

Access to the Switch is protected by a logon security system. You can log on to the switch with the user name and password. After a failed logon attempt, the system displays *Wrong username or password!*. After you log on, the system monitors the interface for periods of inactivity. If the interface is inactive for too long, you are automatically logged off. The CLI initial user name and password is admin. You should change the password as soon as possible, because the initial password is known to anyone who reads this manual. You can also change the user name or add additional user names.

1. Use an RJ-45 cable to connect a terminal or PC/terminal emulator to the switch port to access the CLI.
2. Attach the RJ-45 serial port on the switch front panel to the cable for Telnet/CLI configuration.
3. Attach the other end of the DB-9 cable to a PC running Telnet or a terminal emulation program such as HyperTerminal or Tera Term.
4. Use Console port settings Baud rate: 115200bps, Data bit: 8, Parity: None, Stop bit: 1 Flow control: none. Telnet Port 23. SSH Port 22.
5. Perform initial switch configuration using the CLI (Command Line Interface). See the *SM12XPA CLI Reference* for details.

4. Related Information

Cautions and Warnings

Definitions

Cautions indicate that there is the possibility of poor equipment performance or potential damage to the equipment. **Warnings** indicate that there is the possibility of injury to person.

Cautions and Warnings appear here and may appear throughout this manual where appropriate. Failure to read and understand the information identified by this symbol could result in poor equipment performance, damage to the equipment, or injury to persons.

Caution: While installing or servicing the power supply module, wear a grounding device and observe all electrostatic discharge precautions. Failure to observe this caution could result in damage to, or failure of the power module.

Warnings

Warning: Do not connect the power module to an external power source before installing it into the chassis. Failure to observe this warning could result in an electrical shock, even death.

Warning: The power module has a provision for grounding. Equipment grounding is vital to ensure safe operation. The installer must ensure that the power module is properly grounded during and after installation. Failure to observe this warning could result in an electric shock, even death.

Warning: A readily accessible, suitable National Electrical Code (NEC) or local electrical code approved disconnect device and branch-circuit protector must be part of the building's installed wiring to accommodate permanently connected equipment. Failure to observe this warning could result in an electric shock, even death.

Warning: Turn the external power source OFF and ensure that the power module is disconnected from the external power source before performing any maintenance. Failure to observe this warning could result in an electrical shock, even death.

Warning: Ensure that the disconnect device for the external power source is OPEN (turned OFF) before disconnecting or connecting the power leads to the power module. Failure to observe this warning could result in an electric shock, even death.

See Electrical Safety Warnings below for Electrical Safety Warnings translated into multiple languages.

See the ANSI/NECA/BICSI 568-2006 Standard for Installing Commercial Building Telecommunications Cabling.

High Risk Activities Disclaimer

Components, units, or third-party products used in the product described herein are NOT fault-tolerant and are NOT designed, manufactured, or intended for use as on-line control equipment in the following hazardous environments requiring fail-safe controls: the operation of Nuclear Facilities, Aircraft Navigation or Aircraft Communication Systems, Air Traffic Control, Life Support, or Weapons Systems ("High Risk Activities"). Lantronix and its supplier(s) specifically disclaim any expressed or implied warranty of fitness for such High Risk Activities.

Network Safety

This subclause sets forth a number of recommendations and guidelines related to safety concerns. The list is neither complete nor does it address all possible safety issues. The designer is urged to consult the relevant local, national, and international safety regulations to verify compliance with the appropriate requirements. LAN cabling systems described in this clause are subject to at least four direct electrical safety hazards during their installation and use. These hazards are as follows:

a) Direct contact between LAN components and power, lighting, or communications circuits.

b) Static charge buildup on LAN cabling and components.

c) High-energy transients coupled onto the LAN cabling system.

d) Voltage potential differences between safety grounds to which various LAN components are connected.

Such safety hazards should be avoided or appropriately protected against for proper network installation and performance. In addition to provisions for proper handling of these conditions in an operational system, special measures should be taken to verify that the intended safety features are not negated during installation of a new network or during modification of an existing network.

Equipment shall comply with all applicable local and national codes related to safety.

Safety Instructions for Rack Mount Installations

The instructions below (or similar) are intended for rackmount installation environments:

1. Elevated Operating Ambient: if installed in a closed or multi-unit rack assembly, the operating ambient temperature of the rack environment may exceed room ambient. Install the equipment in an environment compatible with the maximum ambient temperature (Tma) specified.
2. Reduced Air Flow: install the equipment in a rack so that the amount of air flow required for safe operation is not compromised.
3. Mechanical Loading: Mount the equipment in the rack so that a hazardous condition does not occur due to uneven mechanical loading (weight distribution/rack balance).
4. Circuit Overloading: consider the connection of the equipment to the supply circuit and the effect that overloading of the circuits might have on overcurrent protection and supply wiring. Consider all equipment nameplate ratings when addressing this concern.
5. Reliable Earthing: maintain reliable earthing of rack-mounted equipment; pay particular attention to supply connections other than direct connections to the branch circuit (e.g., use of power strips).

Electrical Safety Warnings

Electrical Safety

IMPORTANT: This equipment must be installed in accordance with safety precautions.

Elektrische Sicherheit

WICHTIG: Für die Installation dieses Gerätes ist die Einhaltung von Sicherheitsvorkehrungen erforderlich.

Elektrisk sikkerhed

VIGTIGT: Dette udstyr skal installeres i overensstemmelse med sikkerhedsadvarslerne.

Elektrische veiligheid

BELANGRIJK: Dit apparaat moet in overeenstemming met de veiligheidsvoorschriften worden geïnstalleerd.

Sécurité électrique

IMPORTANT: Cet équipement doit être utilisé conformément aux instructions de sécurité.

Sähköturvallisuus

TÄRKEÄÄ: Tämä laite on asennettava turvaohjeiden mukaisesti.

Sicurezza elettrica

IMPORTANTE: questa apparecchiatura deve essere installata rispettando le norme di sicurezza.

Elektrisk sikkerhet

VIKTIG: Dette utstyret skal installeres i samsvar med sikkerhetsregler.

Segurança eléctrica

IMPORTANTE: Este equipamento tem que ser instalado segundo as medidas de precaução de segurança.

Seguridad eléctrica

IMPORTANTE: La instalación de este equipo deberá llevarse a cabo cumpliendo con las precauciones de seguridad.

Elsäkerhet

OBS! Alla nödvändiga försiktighetsåtgärder måste vidtas när denna utrustning används.

General Troubleshooting

Most problems are caused by the following situations. Check for these items first when starting troubleshooting:

1. Make sure your switch model supports the feature or function attempted; see Features on page 4.
2. Verify the install process; see chapter 2. Installation on page 16.
3. Troubleshoot connected network devices to pinpoint the problem to the switch.
4. Faulty or loose cables. Look for loose or obviously faulty connections. If they appear to be OK, make sure the connections are snug. If that does not correct the problem, try a different cable.
5. Non-standard cables. Non-standard and miswired cables may cause network collisions and other network problems and can seriously impair network performance. Use a new correctly-wired cable. A cable tester is a recommended tool for every Ethernet network installation.
6. Improper Network Topologies. Make sure you have a valid network topology. If you no longer experience the problems, the new topology is probably at fault. Also, make sure your network topology contains no data path loops.
7. Check the port configuration. A port on your Switch may not be operating as you expect because it has been put into a “blocking” state by Spanning Tree, GVRP (automatic VLANs), or LACP (automatic trunking). Note that the normal operation of the Spanning Tree, GVRP, and LACP features may put the port in a blocking state. Make sure the port was not configured as disabled via software.
8. SYS LED is Off. Check connections between the switch, the power cord and the wall outlet. See LED Troubleshooting on page 31 below.
9. Link LED is Off. Verify that the switch and attached device are powered on. Be sure the cable is plugged into the switch and corresponding device. If the switch is installed in a rack, check the connections to the punch-down block and patch panel. Verify that the proper cable type is used, and its length does not exceed specified limits. Check the adapter on the attached device and cable connections for possible defects. Replace the defective adapter or cable if necessary.

LED Troubleshooting

The following table provides information to easily troubleshoot problems by taking actions based on the suggested solutions within.

Table 5: LED Troubleshooting Table

Symptoms	Possible Causes	Suggested Solutions
System LED is Off	The switch is not receiving power.	**1**. Check if correct power cord is connected firmly to the switch and to the AC outlet socket. **2**. Power cycle the switch by unplugging and plugging the power cord back into the switch. **3**. If the LED is still off, try to plug power cord into different AC outlet socket to make sure correct AC source is supplied.
System LED is Red	An abnormal state has been detected by the switch.	Check the switch system log from the Web UI to understand the abnormal state (e.g., exceeding operating temperature range) and take corresponding actions to resolve.
Port Status LED is Off in the Link/Act/Speed Mode	The port is not connected, or the connection is not working.	**1**. Check if the cable connector plug is firmly inserted and locked into the port at both the switch and the connected device. **2**. Make sure the connected device is up and running correctly. **3**. If the symptom still exists, try different cable or different port, in order to identify if it is related to the cable or specific port. **4**. Check if the port is disabled in the Web UI or CLI settings.

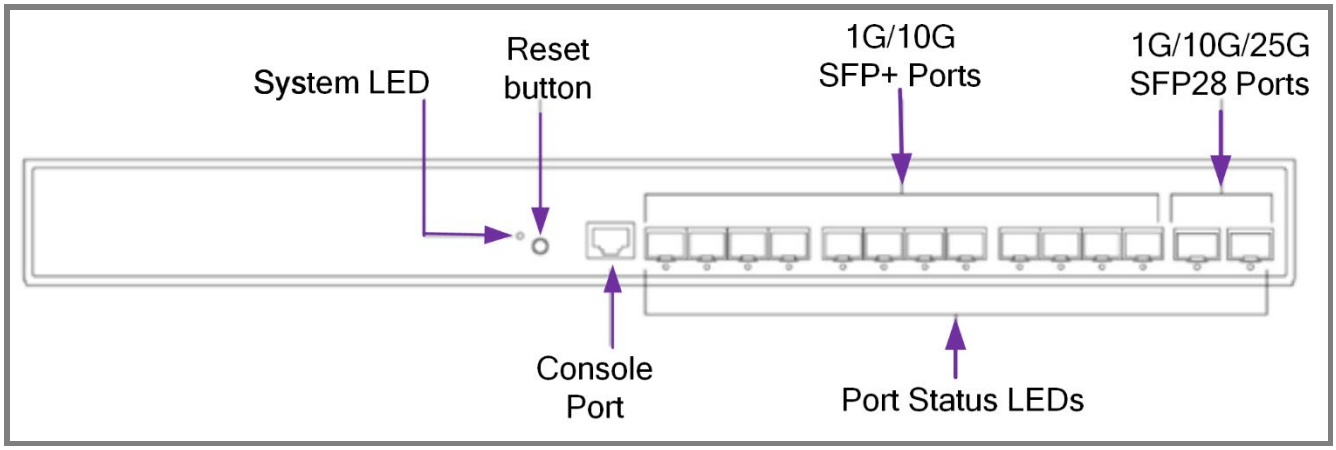

Power Consumption

AC Power Consumption (for one power supply)

AC power consumption measured after 60 minutes under full loading with wire speed forwarding.

AC 90V Input

Device Status	Device Operation Interface	AC Voltage (V)	AC Current Consumption (A)	Power Factor	Apparent Power (VA)	Real Power (W)
Non-loading	None	90	0.25	0.946	22.50	21.29
Standby mode 1 minute	10G SFP+ x 12 25G SFP28 x 2	90	0.334	0.973	30.06	29.25
Full-loading 60 minutes later	10G SFP+ x 12 25G SFP28 x 2	90	0.377	0.976	33.93	33.12

Note: Apparent Power (VA) = AC Voltage x AC Current Consumption.
Real Power (W) = Apparent Power (VA) x Power Factor

AC 100V Input

Device Status	Device Operation Interface	AC Voltage (V)	AC Current Consumption (A)	Power Factor	Apparent Power (VA)	Real Power (W)
Non-loading	None	100	0.225	0.942	22.50	21.20
Standby mode 1 minute	10G SFP+ x 12 25G SFP28 x 2	100	0.307	0.954	30.70	29.29
Full-loading 60 minutes later	10G SFP+ x 12 25G SFP28 x 2	100	0.342	0.956	34.20	32.70

Note: Apparent Power (VA) = AC Voltage x AC Current Consumption.
Real Power (W) = Apparent Power (VA) x Power Factor

AC 110V Input

Device Status	Device Operation Interface	AC Voltage (V)	AC Current Consumption (A)	Power Factor	Apparent Power (VA)	Real Power (W)
Non-loading	None	110	0.211	0.926	23.21	21.49
Standby mode 1 minute	10G SFP+ x 12 25G SFP28 x 2	110	0.279	0.947	30.69	29.06
Full-loading 60 minutes later	10G SFP+ x 12 25G SFP28 x 2	110	0.312	0.959	34.32	32.91

Note: Apparent Power (VA) = AC Voltage x AC Current Consumption.
Real Power (W) = Apparent Power (VA) x Power Factor

AC 220V Input

Device Status	Device Operation Interface	AC Voltage (V)	AC Current Consumption (A)	Power Factor	Apparent Power (VA)	Real Power (W)
Non-loading	**None**	220	0.160	0.606	35.20	21.33
Standby mode 1 minute	**10G SFP+ x 12 25G SFP28 x 2**	220	0.191	0.695	42.02	29.20
Full-loading 60 minutes later	**10G SFP+ x 12 25G SFP28 x 2**	220	0.205	0.725	45.10	32.70

Note: Apparent Power (VA) = AC Voltage x AC Current Consumption.
Real Power (W) = Apparent Power (VA) x Power Factor

AC 240V Input

Device Status	Device Operation Interface	AC Voltage (V)	AC Current Consumption (A)	Power Factor	Apparent Power (VA)	Real Power (W)
Non-loading	None	240	0.164	0.544	39.36	21.41
Standby mode 1 minute	1G RJ45 x 24 10G SFP+ x 4	240	0.192	0.636	46.08	29.31
Full-loading 60 minutes later	1G RJ45 x 24 10G SFP+ x 4	240	0.204	0.672	48.96	32.90

Note: Apparent Power (VA) = AC Voltage x AC Current Consumption
Real Power (W) = Apparent Power (VA) x Power Factor

AC 264V Input

Device Status	Device Operation Interface	AC Voltage (V)	AC Current Consumption (A)	Power Factor	Apparent Power (VA)	Real Power (W)
Non-loading	None	264	0.169	0.475	44.62	21.19
Standby mode 1 minute	1G RJ45 x 24 10G SFP+ x 4	264	0.194	0.572	51.22	29.30
Full-loading 60 minutes later	1G RJ45 x 24 10G SFP+ x 4	264	0.206	0.604	54.38	32.85

Note: Apparent Power (VA) = AC Voltage x AC Current Consumption
Real Power (W) = Apparent Power (VA) x Power Factor

AC Power Consumption (for two power supplies)

AC power consumption measured after 60 minutes under full loading with wire speed forwarding.

AC 90V Input

Device Status	Device Operation Interface	AC Voltage (V)	AC Current Consumption (A)	Power Factor	Apparent Power (VA)	Real Power (W)
Non-loading	None	90	0.342	0.912	30.78	28.07
Standby mode 1 minute	10G SFP+ x 12 25G SFP28 x 2	90	0.420	0.947	37.80	35.80
Full-loading 60 minutes later	10G SFP+ x 12 25G SFP28 x 2	90	0.458	0.963	41.22	39.69

Note: Apparent Power (VA) = AC Voltage x AC Current Consumption
Real Power (W) = Apparent Power (VA) x Power Factor

AC 100V Input

Device Status	Device Operation Interface	AC Voltage (V)	AC Current Consumption (A)	Power Factor	Apparent Power (VA)	Real Power (W)
Non-loading	None	100	0.317	0.886	31.70	28.09
Standby mode 1 minute	10G SFP+ x 12 25G SFP28 x 2	100	0.392	0.923	39.20	36.18
Full-loading 60 minutes later	10G SFP+ x 12 25G SFP28 x 2	100	0.429	0.927	42.90	39.77

Note: Apparent Power (VA) = AC Voltage x AC Current Consumption
Real Power (W) = Apparent Power (VA) x Power Factor

AC 110V Input

Device Status	Device Operation Interface	AC Voltage (V)	AC Current Consumption (A)	Power Factor	Apparent Power (VA)	Real Power (W)
Non-loading	None	110	0.304	0.841	33.44	28.12
Standby mode 1 minute	10G SFP+ x 12 25G SFP28 x 2	110	0.364	0.900	40.04	36.04
Full-loading 60 minutes later	10G SFP+ x 12 25G SFP28 x 2	110	0.394	0.912	43.34	39.53

Note: Apparent Power (VA) = AC Voltage x AC Current Consumption
Real Power (W) = Apparent Power (VA) x Power Factor

AC 220V Input

Device Status	Device Operation Interface	AC Voltage (V)	AC Current Consumption (A)	Power Factor	Apparent Power (VA)	Real Power (W)
Non-loading	None	220	0.275	0.439	60.50	26.56
Standby mode 1 minute	10G SFP+ x 12 25G SFP28 x 2	220	0.295	0.530	64.90	34.40
Full-loading 60 minutes later	10G SFP+ x 12 25G SFP28 x 2	220	0.311	0.590	68.42	40.37

Note: Apparent Power (VA) = AC Voltage x AC Current Consumption
Real Power (W) = Apparent Power (VA) x Power Factor

AC 240V Input

Device Status	Device Operation Interface	AC Voltage (V)	AC Current Consumption (A)	Power Factor	Apparent Power (VA)	Real Power (W)
Non-loading	None	240	0.287	0.405	68.88	27.90
Standby mode 1 minute	1G RJ45 x 24 10G SFP+ x 4	240	0.306	0.489	73.44	35.91
Full-loading 60 minutes later	1G RJ45 x 24 10G SFP+ x 4	240	0.314	0.523	75.36	39.41

Note: Apparent Power (VA) = AC Voltage x AC Current Consumption
Real Power (W) = Apparent Power (VA) x Power Factor

AC 264V Input

Device Status	Device Operation Interface	AC Voltage (V)	AC Current Consumption (A)	Power Factor	Apparent Power (VA)	Real Power (W)
Non-loading	**None**	264	0.294	0.357	77.62	27.71
Standby mode 1 minute	**1G RJ45 x 24 10G SFP+ x 4**	264	0.316	0.427	83.42	35.62
Full-loading 60 minutes later	**1G RJ45 x 24 10G SFP+ x 4**	264	0.324	0.458	85.54	39.18

Note: Apparent Power (VA) = AC Voltage x AC Current Consumption
Real Power (W) = Apparent Power (VA) x Power Factor

Regulatory Agency Information

FCC Regulations

This equipment has been tested and found to comply with the limits for a Class A digital device, pursuant to part 15 of the FCC rules. These limits are designed to provide reasonable protection against harmful interference when the equipment is operated in a commercial environment. This equipment generates, uses, and can radiate radio frequency energy and, if not installed and used in accordance with the instruction manual, may cause harmful interference to radio communications.

Operation of this equipment in a residential area is likely to cause harmful interference, in which case the user will be required to correct the interference at the user's own expense.

This device complies with part 15 of the FCC Rules. Operation is subject to the following two conditions: (1) This device may not cause harmful interference, and (2) this device must accept any interference received, including interference that may cause undesired operation.

Canadian Regulations

This digital apparatus does not exceed the Class A limits for radio noise for digital apparatus set out on the radio interference regulations of the Canadian Department of Communications.

Le présent appareil numérique n'émet pas de bruits radioélectriques dépassant les limites applicables aux appareils numériques de la Class A prescrites dans le Règlement sur le brouillage radioélectrique édicté par le ministère des Communications du Canada.

European Regulations

Warning
This is a Class A product. In a domestic environment this product may cause radio interference in which case the user may be required to take adequate measures.

Achtung !
Dieses ist ein Gerät der Funkstörgrenzwertklasse A. In Wohnbereichen können bei Betrieb dieses Gerätes Rundfunkstörungen auftreten. In diesem Fäll is der Benutzer für Gegenmaßnahmen verantwortlich.

Attention !
Ceci est un produit de Classe A. Dans un environment domestique, ce produit risque de créer des interférences radioélectriques, il appartiendra alors à l'utilsateur de prende les measures spécifiques appropriées.

In accordance with European Union Directive 2002/96/EC of the European Parliament and of the Council of 27 January 2003, Lantronix will accept post usage returns of this product for proper disposal. The contact information for this activity can be found in the 'Contact Us' portion of this document.

CAUTION: RJ connectors are NOT INTENDED FOR CONNECTION TO THE PUBLIC TELEPHONE NETWORK. Failure to observe this caution could result in damage to the public telephone network.

Der Anschluss dieses Gerätes an ein öffentlickes Telekommunikationsnetz in den EGMitgliedstaaten verstösst gegen die jeweligen einzelstaatlichen Gesetze zur Anwendung der Richtlinie 91/263/EWG zur Angleichung der Rechtsvorschriften der Mitgliedstaaten über Telekommunikationsendeinrichtungen einschliesslich der gegenseitigen Anerkennung ihrer Konformität.

Standard: UL 62368-1, 3rd Ed, 2021-10-22 (Audio/video, information and communication technology equipment Part 1: Safety requirements)

CAN/CSA C22.2 No. 62368-1:19, 3rd Ed, 2021-10-22 (Audio/video, information and communication technology equipment Part 1: Safety requirements)

Certification Type: Listing
CCN: AZOT, AZOT7 (Audio/video, Information and Communication Technology Equipment)
Complementary CCN: N/A

Rating: 100-240Vac, 4.0A, 50-60HZ (Each Power Supply, 2 Max)

Restricted Access Area: "Equipment is intended for installation in Restricted Access Area" (Instruction) /
“Les matériels sont destinés à être installés dans des EMPLACEMENTS À ACCÈS RESTREINT” (Instruction)

Protective earthing is used as a safeguard: The power supply cord(s) must be plugged into socket-outlet(s) that is / are provided with a suitable earth ground.

Optical Transceiver (Optional): Rated DC 3.3 V, Class 1 laser product; Hazard Level 1 Class III.

Optical Transceiver (Optional) (Alternate): 3.3Vdc."CLASS 1 LASER PRODUCT" or equivalent and complied with CDRH

EU Declaration of Conformity (SM12XPA)

Manufacture’s Name : Lantronix, Inc.
Manufacture’s Address : 48 Discovery, Suite 250, Irvine, CA 92618, USA

Declares that the product: SM12XPA
Conforms to the following Product Regulations:

47 CFRFCC Part 15, Subpart B, Class A, ANSI C63.4:2014
UKCA and UL

Standards: EN 62368-1, EN 55032:2015+A11:2020, Class A. CISPR 32:2015+Cor 1:2016, Class A. AS/NZS CISPR 32:2015, Class A. EN 61000-3-2:2014, EN 61000-3-3:2013, EN 55035:2017 +A11:2020.

Measurement procedures: EN 61000-4-2:2009 / IEC 61000-4-2:2008 ED. 2.0, EN 61000-4-3:2006 +A1:2008 +A2:2010 / IEC61000-4-3:2010 ED. 3.2, EN 61000-4-4:2012 / IEC 61000-4-4:2012 ED. 3.0, EN 61000-4-5:2014 +A1:2017 / IEC 61000-4-5:2017 ED. 3.1, EN 61000-4-6:2014+AC:2015 / IEC 61000-4-6:2013 ED. 4.0, EN 61000-4-8:2010 / IEC 61000-4-8:2009 ED. 2.0, EN 61000-4-11:2004 +A1: 2017 / IEC 61000-4-11:2017 ED. 2.1, EN 62368-1:2014 +A11:2017

BS EN 55032:2015 +A11:2020, Class A, BS EN 61000-3-2:2014, BS EN 61000-3-3:2013, BS EN 55035:2017 +A11:2020, BS EN 61000-4-2:2009 / IEC 61000-4-2:2008 ED. 2.0, BS EN 61000-4-3:2006 +A1:2008 +A2:2010 / IEC 61000-4-3:2010 ED. 3.2, BS EN 61000-4-4:2012 / IEC 61000-4-4:2012 ED. 3.0 BS EN 61000-4-5:2014 +A1:2017 / IEC 61000-4-5:2017, ED.3.1, BS EN 61000-4-6:2014+AC:2015 / IEC 61000-4-6:2013 ED. 4.0, BS EN 61000-4-8:2010 / IEC 61000-4-8:2009 ED. 2.0, BS EN 61000-4-11:2004 +A1: 2017 / IEC 61000-4-11:2017 ED. 2.1.

With the technical construction on file at the above address, this product carries the CE Mark

I, the undersigned, hereby declare that the equipment specified above conforms to the above Directive(s) and Standards(s).

Place: Irvine, CA
Date: June 27,2023
Signature: *Eric Bass*
Name: Eric Bass
Position: Vice President of Engineering

UKCA Certificate of Conformity (SM12XPA)

CERTIFICATE OF CONFORMITY

BUREAU VERITAS

UK CA

Product	:	Managed Switch, 12-port 1G/10G SFP+ with 2-port 10G/25G SFP28
Brand	:	LANTRONIX
Test Model	:	SM12XPA
Applicant	:	Lantronix, Inc.
Report No.	:	UKBEFT-WTW-P22010349

We, **Bureau Veritas Consumer Products Services (H.K.) Ltd., Taoyuan Branch**, declare that the equipment above has been tested in our facility and found compliance with the requirement limits of applicable standards, in accordance with the Electromagnetic Compatibility Regulations 2016 (S.I. 2016/1091). The test record, data evaluation and Equipment Under Test (EUT) configurations represented herein are true and accurate under the standards herein specified.

BS EN 55032:2015 +A11:2020, Class A
BS EN 61000-3-2:2014
BS EN 61000-3-3:2013
BS EN 55035:2017 +A11:2020
BS EN 61000-4-2:2009 / IEC 61000-4-2:2008 ED. 2.0
BS EN 61000-4-3:2006 +A1:2008 +A2:2010 / IEC 61000-4-3:2010 ED. 3.2
BS EN 61000-4-4:2012 / IEC 61000-4-4:2012 ED. 3.0
BS EN 61000-4-5:2014 +A1:2017 / IEC 61000-4-5:2017 ED. 3.1
BS EN 61000-4-6:2014+AC:2015 / IEC 61000-4-6:2013 ED. 4.0
BS EN 61000-4-8:2010 / IEC 61000-4-8:2009 ED. 2.0
BS EN 61000-4-11:2004 +A1: 2017 / IEC 61000-4-11:2017 ED. 2.1

NOTE: The above EN/IEC basic standards are applied with latest version if customer has no special requirement.

Jim Hsiang

Jim Hsiang / Associate Technical Manager
2022/1/26

No. 47-2, 14th Ling, Chia Pau Vil., Lin Kou Dist., New Taipei City, Taiwan
Tel: 886-2-26052180 Fax: 886-2-26051924
http://www.bureauveritas-adt.com E-Mail: service.adt@tw.bureauveritas.com

UK Certificate of Conformity (SM12XPA)

Standards: BS EN 55032:2015 +A11:2020, Class A
BS EN 6100-3-2:2014
BS EN 6100-3-3:2013
BS EN 55035:2017 +A11:2020

Measurement Procedures:
BS EN 61000-4-2:2009 / IEC 61000-4-2:2008 ED. 2.0
BS EN 61000-4-3:2006 +A1:2008 +A2:2010 / IEC 6100-4-3:2010 ED. 3.2
BS EN 61000-4-4:2012 / IEC 61000-4-4:2012 ED. 3.0
BS EN 61000-4-5:2014 +A1:2017 / IEC 61000-4-5:2017 ED. 3.1
BS EN 61000-4-6:2014+AC:2015 / IEC 61000-4-6:2013 ED. 4.0
BS EN 61000-4-8:2010 / IEC 61000-4-8:2009 ED. 2.0
BS EN 61000-4-11:2004 +A1: 2017 / IEC 61000-4-11:2017 ED. 2.1

UKCA Declaration of Conformity (PS-AC-250)

UK CA

Declaration of Conformity

Product : PS-AC-250
Product 250W Switching Power Supply
Model / Brand / SN. Power 250W / RUBYTECH

Importer or Authorized representative (UK-GB):
Name: LANTRONIX INC
Address: 48 discovery Suite 250 Irvine, CA 92618 United States

This declaration is issued under the sole responsibility of the mentioned Manufacturer. The subject equipment under declaration is in conformity with the UK-GB Regulation(s) below:

Statutory Instruments 2016 No. 1091 *The Electromagnetic Compatibility Regulations 2016*

Below designated standards were taken conferring a presumption of conformity with the relevant UK-GB regulations:

BS EN 55032: 2015 + A11: 2020
BS EN IEC 61000-3-2: 2019
BS EN 61000-3-3: 2013 + A1: 2019

BS EN 55035: 2017 + A11: 2020
IEC 61000-4-2: 2008
IEC 61000-4-3: 2006 + A1: 2007 + A2: 2010
IEC 61000-4-4: 2012
IEC 61000-4-5: 2014 + A1: 2017
IEC 61000-4-6: 2013 + COR1: 2015
IEC 61000-4-8: 2009
IEC 61000-4-11: 2004 + A1: 2017

The following manufacturer outside the UK-GB is responsible for this declaration:
Name: Ruby Tech Corp.

Person responsible for making this declaration:

Roxanne Liao
(Name, Surname)

AVP
(Position / Title)

Taipei / June 21st, 2023
(Place / Date) (Legal Signature)

NDAA, RoHS, REACH and WEEE Compliance

See https://www.lantronix.com/legal/rohs/.

Box Label and Device Label

The labels provide information that can help the Tech Support Engineer.

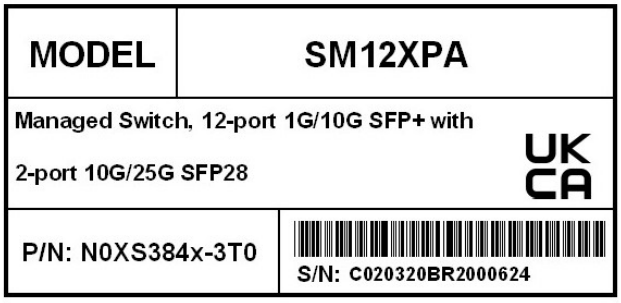

Box Label

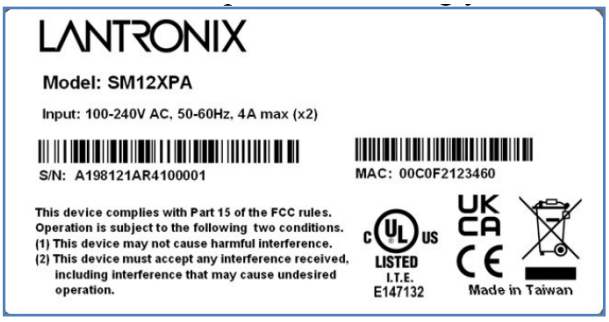

Device Label

Record Device and System Information

After performing the troubleshooting procedures above, and before calling or emailing Tech Support, record as much information as possible in order to help the Tech Support Engineer.

Model name: _____ SN: _____

LED Status: _____

_____

_____

Current Alarm data and alarm history: _____

Power Supply(s) used : _____

Your Lantronix service contract number: _____

Describe the failure: _____

_____

_____

_____

Describe any action(s) already taken to resolve the problem (e.g., troubleshooting steps, etc.): _____

_____

_____

_____

The model # and serial # of all other Lantronix products in the network: _____

_____

_____

Describe your network environment (layout, cable type, cable distance, etc.): _____

_____

_____

_____

Any previous Return Material Authorization (RMA) numbers: _____

List Lantronix or third-party equipment in the network (e.g., PCs, servers, switches, routers, hubs, remote devices (camera, etc.), SFPs, etc.): _____ _____

_____

_____

_____

Lantronix Corporate Headquarters
48 Discovery, Suite 250
Irvine, CA 92618, USA
Toll Free: 800-526-8766
Phone: 949-453-3990
Fax: 949-453-3995

Technical Support
Online: https://www.lantronix.com/technical-support/

Sales Offices
For a current list of our domestic and international sales offices, go to the Lantronix web site at www.lantronix.com/about/contact.