DA8000WH

8-Port Network Switch

Support 8 10/100/1000BASE-T RJ45 ports

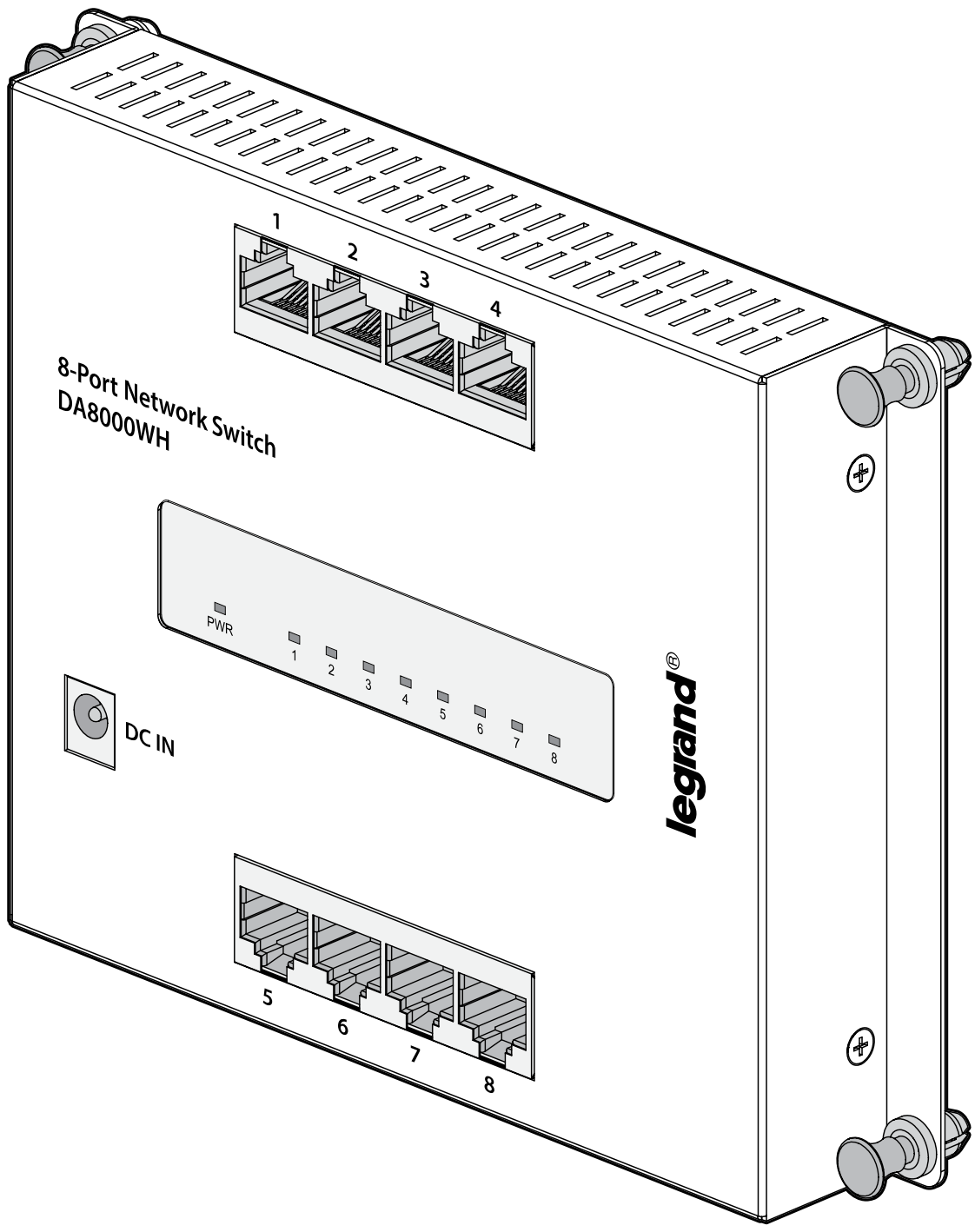

United States:

Legrand AV, Inc.
6436 City West Parkway
Eden Prairie, MN 55344
1-866-977-3901

Canada:

Legrand, Inc.
9024 Keele Street,
Vaughn, Ontario L4K 2N2
1-800-723-5175

www.legrandav.com

PARTS INCLUDED

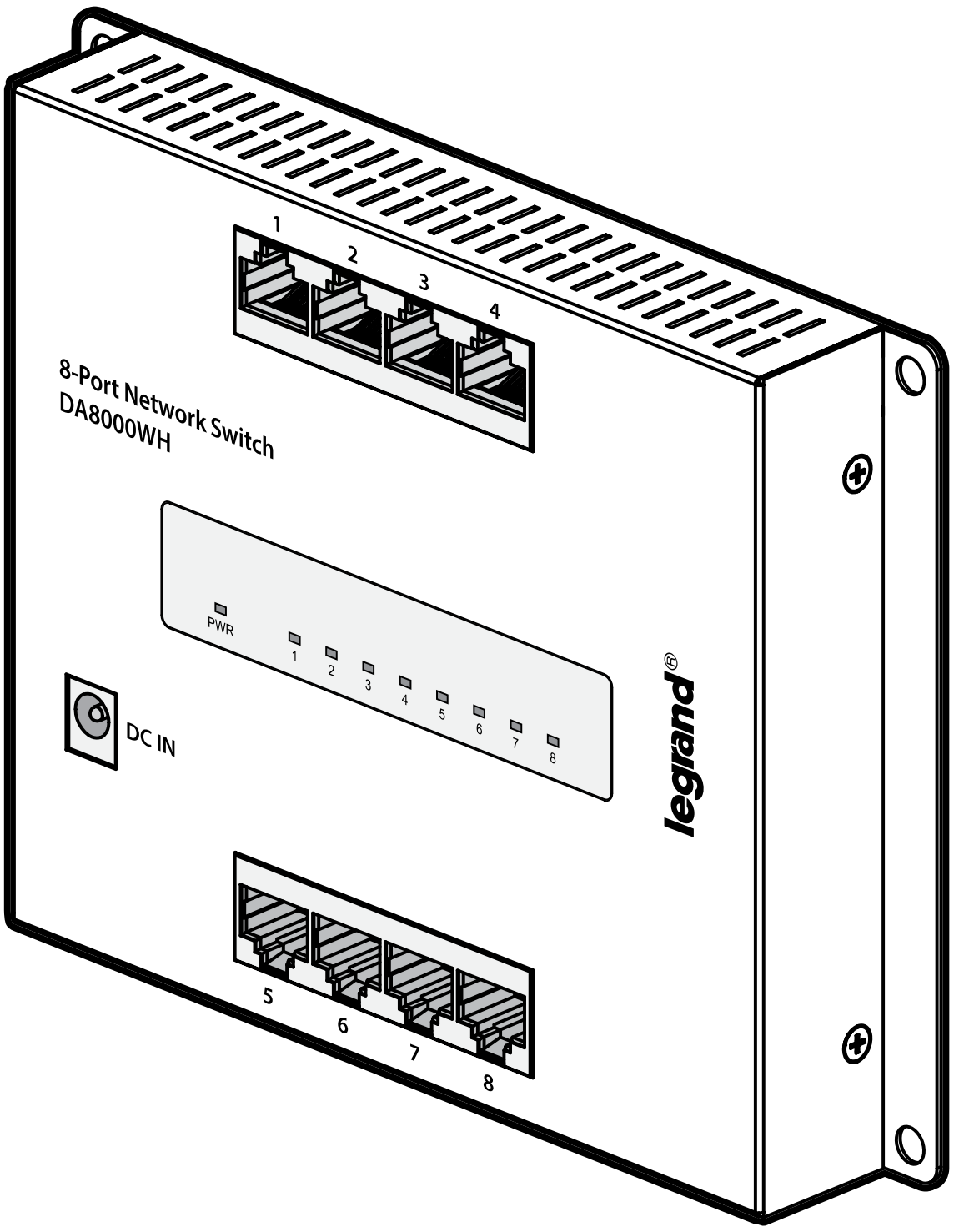

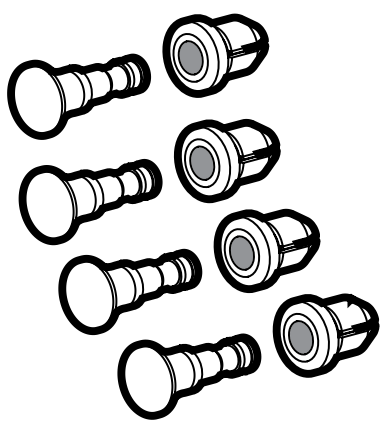

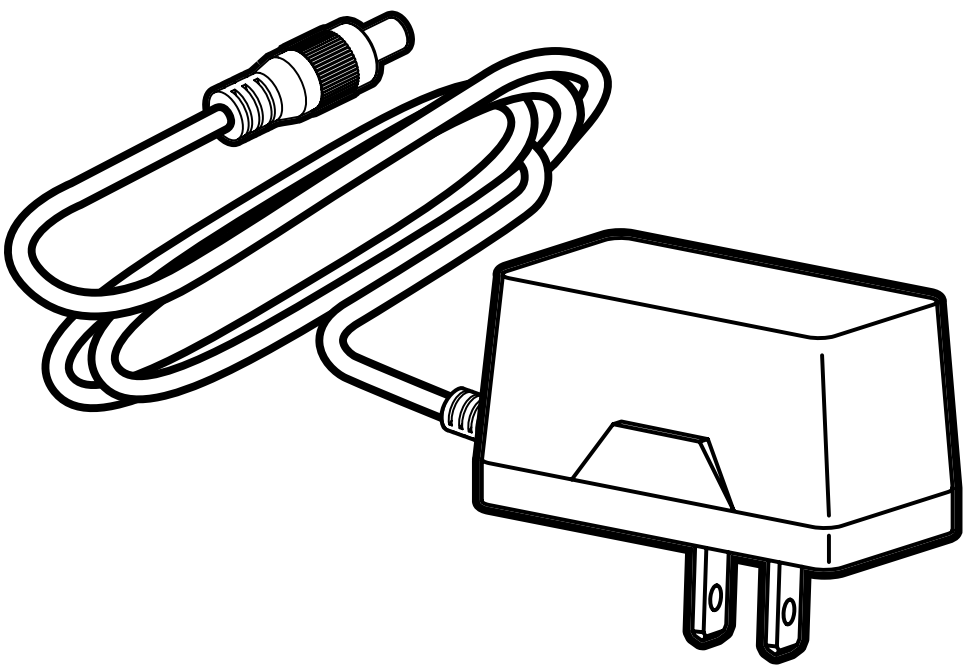

LED INDICATORS

LED	COLOR	FUNCTION
POWER	Off	Power off
	Green	Power on
LAN PORT	Off	Port disconnected or link fail
	Green	1000Mbps connected
	Amber	10/100Mbps connected
	Blinking	Sending or receiving data

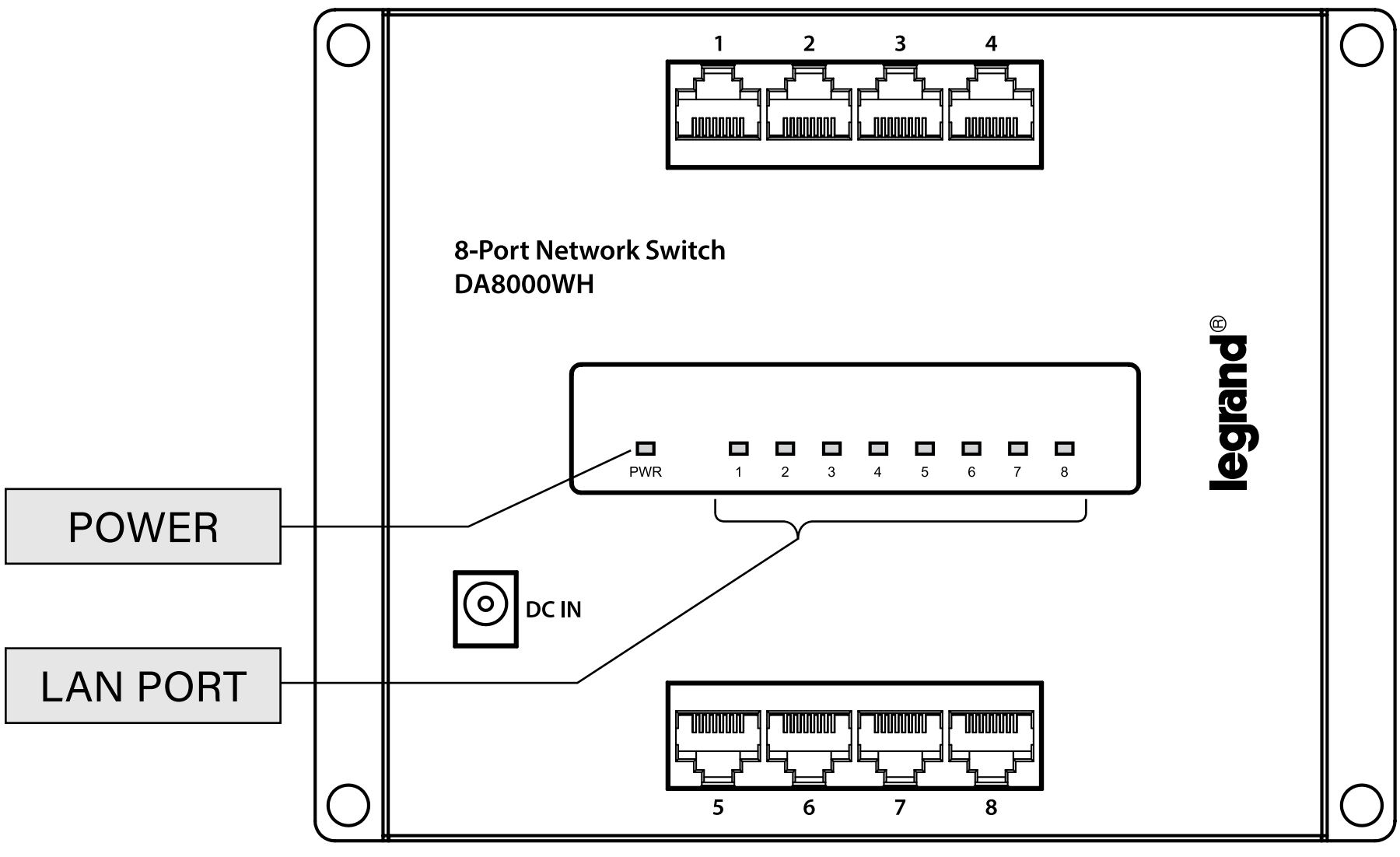

INSTALLATION

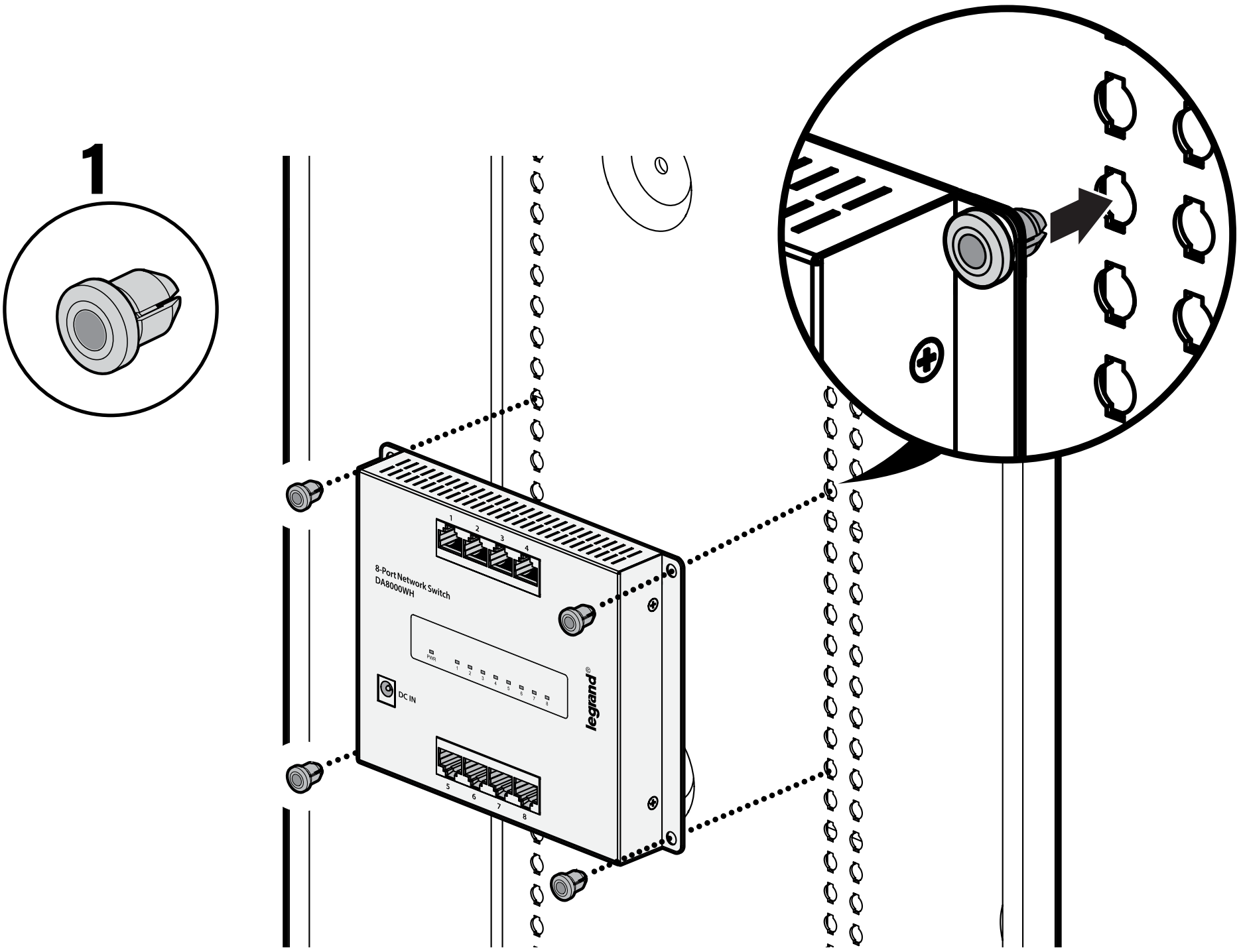

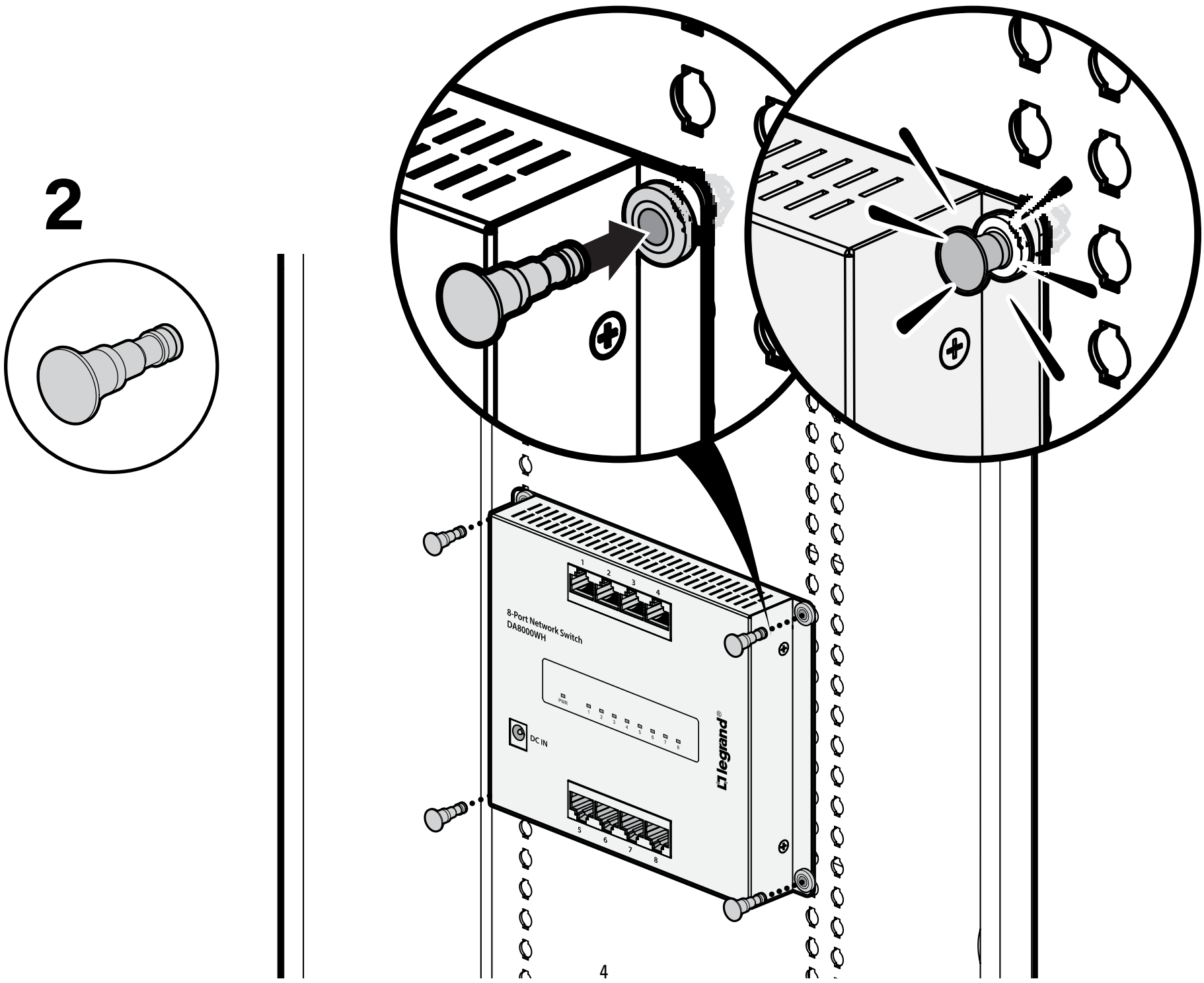

3

4 Connect your devices with TIA568A recommended cables (Cat5e/Cat6/Cat6a)

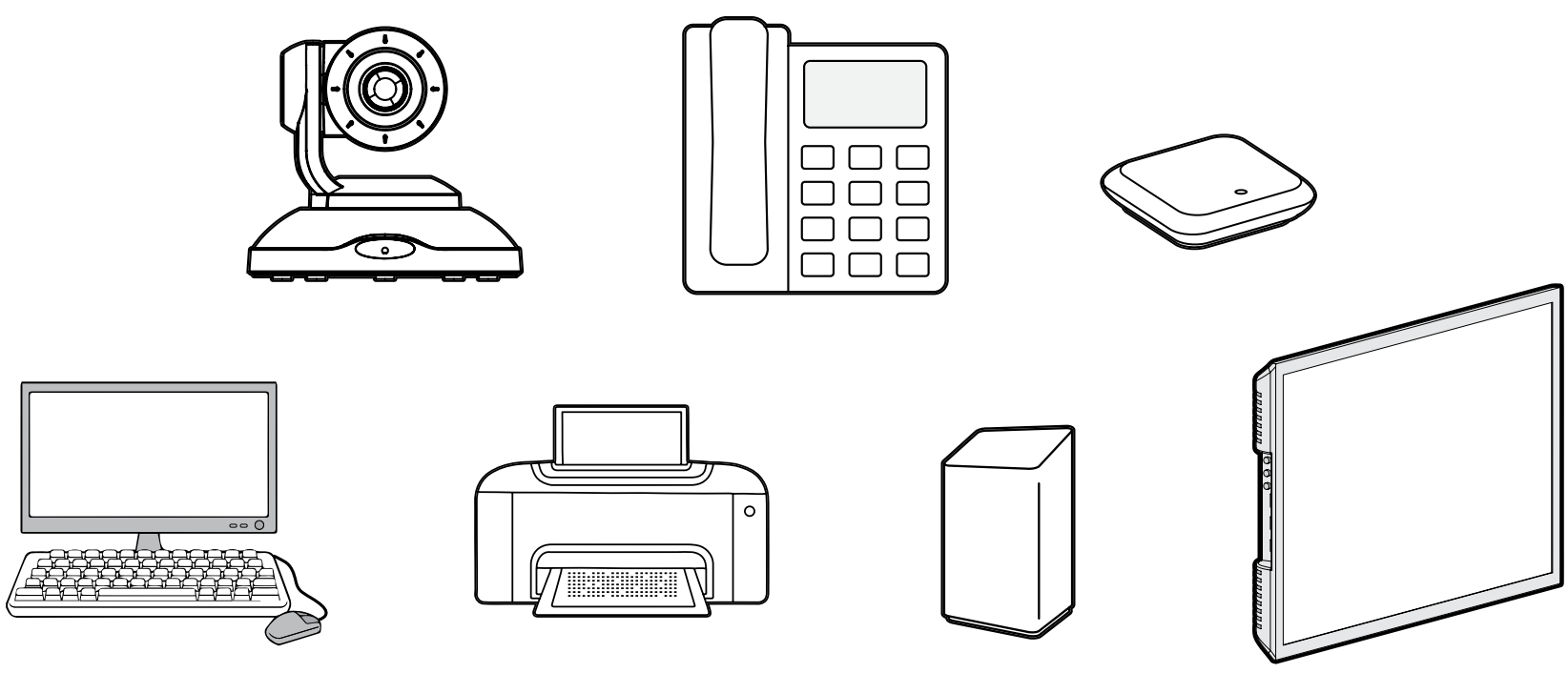

SYSTEM SPECIFICATIONS

Model No.	DA8000WH
Key Components	Realtek RTL8370N-VB-CG
I/O ports	8 x Gigabit Ethernet Ports, RJ45
HW feature	IEEE802.3 10BASE-T IEEE802.3u 100BASE-TX IEEE802.3ab 1000BASE-T IEEE802.3az EEE MAC address Table: 4K Packet buffer size: 192Kbytes Jumbo Frame: 9216bytes
SW feature	Support HALF/FULL-Duplex operation IEEE802.3x Flow control & Back pressure Auto negotiation Auto MDI/MDIX Non-Blocking Store and Forward VLAN PASSTHRU Reserve Multicast Address:

Power Input	AC-to-DC power adapter Input: 100-240V AC Output: 5VDC/1A
Dimension	W=142 mm D=125 mm H=25 mm
FAN Design	Fanless
Temperature	Operating: -20 ~ 45°C Storage : -40 ~ 70°C
Humidity	Operating: 10% ~ 90% RH (non-condensing) Storage: 5% ~ 90% RH (non-condensing)
Safety	LVD EN62368-1:2020
EMC	FCC Part 15, Subpart B: ANSI C63.4-2014 class A CE EN 55032: 2015 + AC :2016 EN55035: 2017

⚠ CAUTION!: Avoid potential personal injuries and property damage!

- ► To Reduce the Risk of Electric Shock - Use Only in Dry Locations, Indoors!
- ► To reduce the risk of fire or electric shock, do not use this device with a receptacle in which the slot openings do not align with the blades.
- ► All accessories must be grounded.
- ► Do not use this product for any purpose not explicitly specified by manufacturer.
- ► If you do not understand these instructions, or have doubts about the safety of the installation, assembly or use of this product, contact Customer Service or call a qualified contractor.
- ► Manufacturer is not responsible for damage or injury caused by incorrect assembly or use.

This device complies with part 15 of the FCC Rules. Operation is subject to the following two conditions: (1) This device may not cause harmful interference, and (2) this device must accept any interference received, including interference that may cause undesired operation.

CAN ICES-003 (B)/NMB-003(B)

NOTE: This equipment has been tested and found to comply with the limits for a Class A digital device, pursuant to Part 15 of the FCC Rules. These limits are designed to provide reasonable protection against harmful interference in a residential installation. This equipment generates, uses and can radiate radio frequency energy and, if not installed and used in accordance with the instructions, may cause harmful interference to radio communications. However, there is no guarantee that interference will not occur in a particular installation. If this equipment does cause harmful interference to radio or television reception, which can be determined by turning the equipment off and on, the user is encouraged to try to correct the interference by one or more of the following measures:

1. Reorient or relocate the receiving antenna.
2. Increase the separation between the equipment and receiver.
3. Connect the equipment into an outlet on a circuit different from that to which the receiver is connected.
4. Consult the dealer or an experienced radio/TV technician for help.

CAUTION: Any changes or modifications not expressly approved by the party responsible for compliance could void the user's authority to operate the equipment.

Responsible Party: Legrand AV Inc., 6436 City West Parkway, Eden Prairie, MN 55344
US: 1-866-977-3901 | CANADA: 1-800-723-5175 | www.legrandav.com

Legrand AV Inc. and its affiliated corporations and subsidiaries (collectively, "Legrand"), intend to make this manual accurate and complete. However, Legrand makes no claim that the information contained herein covers all details, conditions, or variations. Nor does it provide for every possible contingency in connection with the installation or use of this product. The information contained in this document is subject to change without notice or obligation of any kind. Legrand makes no representation of warranty, expressed or implied, regarding the information contained herein. Legrand assumes no responsibility for accuracy, completeness or sufficiency of the information contained in this document.

©2025 Legrand AV Inc. All rights reserved.

Legrand AV Inc., 6436 City West Parkway, Eden Prairie, MN 55344 USA

6901-603542 00