LEV Series Mechanical Interlocks, with and without Inform™ Technology

IEC 60309-1 AND 60309-2 STANDARDS SERIES II

APPLICATION

LEV Series Mechanical Interlocks incorporate a safety disconnect switch and an IEC receptacle in a non-metallic watertight enclosure. The interlock mechanism prevents the making and breaking of power under load. These devices are designed to simplify installation, endure the harshest environments and improve safety and productivity in any industrial facility.

SPECIFICATION

The enclosure shall meet the following ratings:

- UL 50E Type 3R, 4X, 6, 6P, 12, and 13
- IEC 60529 IP 66, 67, 68*, 69
- ISO 20653 IP 69K
- NSF 14159-1*

The enclosure shall be rated V-0 per UL 94 for flammability and be a UV stabilized F1 rated enclosure. The enclosure shall have a lockable handle capable of accepting 3 padlocks as per NEMA KS 1 for OSHA LO/TO compliance. Fused models shall accept "Class J" time-delay fuses. The device shall have a 5-year warranty and be offered with optional local and remote monitoring*.

STANDARDS AND COMPLIANCE

- UL 50E Type 3R, 4X, 6, 6P, 12, and 13
- IEC 60529 IP 66, 67, 68*, 69
- ISO 20653 IP 69K
- NEMA Rating: 3R, 4X, 12
- NSF: 14159-1, Hygienic Requirement for the Design of Meat & Poultry Processing Equipment*
- UV Resistance: UV stabilized F1 rated enclosure
- Cold Impact: 5 ft-lb impact at -31°F for 3 hrs. per UL746C
- Crush Test: 100 lbs. for 1 minute per surface
- Mold Stress Relief: 70°C for 7 hours without deformation
- Flammability: Rated V-0 per UL 94
- Strength of Interlock Test: Latch withstands over 18 ft-lbs of torque
- Lockable handle: Accepts 3 padlocks as per NEMA KS 1

*Industry-exclusive features

DESIGN CONSIDERATIONS AND FEATURES

- Enclosed pre-wired IEC receptacle accepts any IEC 60309-2 plug; preferred to be used in conjunction with Leviton's LEV Series IEC 60309-2 plugs to maintain environmental ratings
- Impact-resistant, UV stable watertight enclosure ideal for use in harsh industrial environments
- Long length, overmolded handle provides an improved grip for safety
- Interlock mechanism made of aluminum and steel components (handle shaft and dowel pin, stop plate, interlock catch, latch spring, and coil spring) ensures dependable performance
- Embossed markings easily identify ON/OFF positions
- Cover is bottom hinged with captive screws for easy installation
- Mounting feet can be adjusted for several angles and provide ¼" standoff from surface for NEC 300.6 air space requirements, NSF certification* and easy cleaning
- Available in multiple amperages, wiring configurations and clock positions for any application

COUNTRY OF ORIGIN – Mexico

inform™

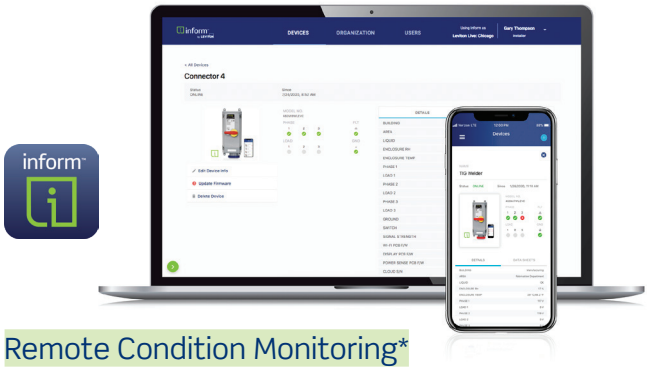

Local Condition Monitoring*

- Ability to monitor phase voltage (single and three Phase) of the line side and load side of the switch and display status via individual LEDs (one for each phase); green steady LED indicates normal voltage level, red blinking LED indicates abnormal voltage level
- Ability to monitor ground continuity upstream of the switch and display status via LED; green steady LED indicates presence of ground, red blinking LED indicates open ground
- Ability to monitor liquid accumulation inside enclosure and display status via LED; green steady LED indicates no appreciable liquid accumulation, yellow blinking LED indicates appreciable liquid accumulation

Remote Condition Monitoring*

- Ability to remotely view condition monitoring status and receive alerts when abnormal operating conditions exist
- Ability to monitor temperature and relative humidity inside the enclosure
- Ability to view actual sensor values
- Ability to perform over-the-air (OTA) firmware updates
- Wi-Fi communication interface conforms with Wi-Fi® 802.11 a/b/g/n networks @ 2.4GHz and 5GHz with WPA or WPA2 security

*Industry-exclusive features

PHYSICAL SPECIFICATIONS

DIMENSIONS:	See last page
MATERIALS:	**Contact Material:** Nickel-Plated Brass **Gasket Materials:** Nitrile and Silicone **Handle Material:** PBT+PC with TPE Overmold **Housing Material:** PBT+PC **Housing Screws:** 300 Series Stainless Steel
ENVIRONMENTAL CONDITIONS:	**Operating Temperature (Non-Inform Units):** -40°C to 75°C **Operating Temperature (Inform Units):** -40°C to 60°C

WARRANTY INFORMATION

5-YEAR
LIMITED WARRANTY

ORDERING INFORMATION BREAKDOWN

4	30	MI	7	W	LEV	C
1st digit	**2nd–3rd Digit**	**Letter**	**Clock Position***	**Suffix**	**NEW Leviton**	**Feature**
3 = 3 wire	20 = 20 Amp	MI = Mechanical Interlock, Non-Fused	4 = 4 o'clock	W = Watertight	LEV Series	S = Sensing, LED Indication
4 = 4 wire	30 = 30 Amp	MF = Mechanical MF = Interlock, MF = Fused	5 = 5 o'clock			C = Communicating, Remote Monitoring via Wi-Fi
5 = 5 wire	60 = 60 Amp		6 = 6 o'clock			AC = Factory Installed Normally Open (NO) Auxiliary Contact
			7 = 7 o'clock			
			9 = 9 o'clock			
			12 = 12 o'clock			

*Clock position applies to ground pin location on female devices

ORDERING INFORMATION

CATALOG NUMBER BREAKDOWN CAN BE FOUND ON THE PREVIOUS PAGE.

20 A, 30 A and 60 A Mechanical Interlocks

Amps	Wiring	Color	Voltage AC	Clock Position	Fused Mechanical Interlock	Fused Mechanical Interlock HP Rating	Non-Fused Mechanical Interlock	Non-Fused Mechanical Interlock HP Rating
20	2p3w	Blue	240	6	—	—	320MI6WLEV	3 HP
		Red	480	7	—	—	320MI7WLEV	5 HP
	3p4w	Orange	125/250	12	420MF12WLEV	2 HP @ 120 VAC 3 HP @ 208-240 VAC L-L	420MI12WLEV	2 HP @ 120 VAC 3 HP @ 208-240 VAC L-L
		Blue	3Ø240	9	420MF9WLEV	7.5 HP	420MI9WLEV	10 HP
		Red	3Ø480	7	420MF7WLEV	15 HP	420MI7WLEV	20 HP
		Black	3Ø600	5	420MF5WLEV	20 HP	420MI5WLEV	25 HP
	4p5w	Blue	3ØY120/208	9	—	—	520MI9WLEV	10 HP
		Red	3ØY277/480	7	—	—	520MI7WLEV	20 HP
		Black	3ØY347/600	5	—	—	520MI5WLEV	25 HP
30	2p3w	Blue	240	6	—	—	330MI6WLEV	5 HP
		Red	480	7	—	—	330MI7WLEV	10 HP
	3p4w	Orange	125/250	12	430MF12WLEV	2 HP @ 120 VAC 3 HP @ 208-240 VAC L-L	430MI12WLEV	2 HP @ 120 VAC 3 HP @ 208-240 VAC L-L
		Blue	3Ø240	9	430MF9WLEV	7.5 HP	430MI9WLEV**	10 HP
		Red	3Ø480	7	430MF7WLEV	15 HP	430MI7WLEV	20 HP
		Black	3Ø600	5	430MF5WLEV	20 HP	430MI5WLEV	25 HP
	4p5w	Blue	3ØY120/208	9	—	—	530MI9WLEV	10 HP
		Red	3ØY277/480	7	530MF7WLEV	15 HP	530MI7WLEV	20 HP
		Black	3ØY347/600	5	530MF5WLEV	20 HP	530MI5WLEV	25 HP
60	2p3w	Blue	240	6	360MF6WLEV	7.5 HP	360MI6WLEV	10 HP
		Red	480	7	—	—	360MI7WLEV	20 HP
	3p4w	Orange	125/250	12	460MF12WLEV	2 HP @ 120 VAC 7.5 HP @ 208-240 VAC L-L	460MI12WLEV	2 HP @ 120 VAC 10 HP @ 208-240 VAC L-L
		Blue	3Ø240	9	460MF9WLEV	15 HP	460MI9WLEV***	20 HP
		Red	3Ø480	7	460MF7WLEV	30 HP	460MI7WLEV	40 HP
		Black	3Ø600	5	460MF5WLEV	50 HP	460MI5WLEV	40 HP
	4p5w	Blue	3ØY120/208	9	560MF9WLEV	15 HP	560MI9WLEV	20 HP
		Red	3ØY277/480	7	—	—	560MI7WLEV	40 HP
		Black	3ØY347/600	5	—	—	560MI5WLEV	40 HP

**430MI9WLEVAC - Available with Factory-Installed Auxiliary Contact
***460MI9WLEVAC - Available with Factory-Installed Auxiliary Contact

20 A, 30 A and 60 A Mechanical Interlocks with Inform™ Technology

Amps	Wiring	Color	Voltage AC	Clock Position	On-device, Local Monitoring		Remote Monitoring via Wi-Fi	
					Non-Fused Mechanical Interlock	Non-Fused Mechanical Interlock HP Rating	Non-Fused Mechanical Interlock	Non-Fused Mechanical Interlock HP Rating
20	3p4w	Blue	3Ø240	9	420MI9WLEVS	10 HP	420MI9WLEVC	10 HP
		Red	3Ø480	7	420MI7WLEVS	20 HP	420MI7WLEVC	20 HP
30	3p4w	Blue	3Ø240	9	430MI9WLEVS	10 HP	430MI9WLEVC	10 HP
		Red	3Ø480	7	430MI7WLEVS	20 HP	430MI7WLEVC	20 HP
60	3p4w	Blue	3Ø240	9	460MI9WLEVS	20 HP	460MI9WLEVC	20 HP
		Red	3Ø480	7	460MI7WLEVS	40 HP	460MI7WLEVC	40 HP

DRAWINGS

20 and 30 Amp

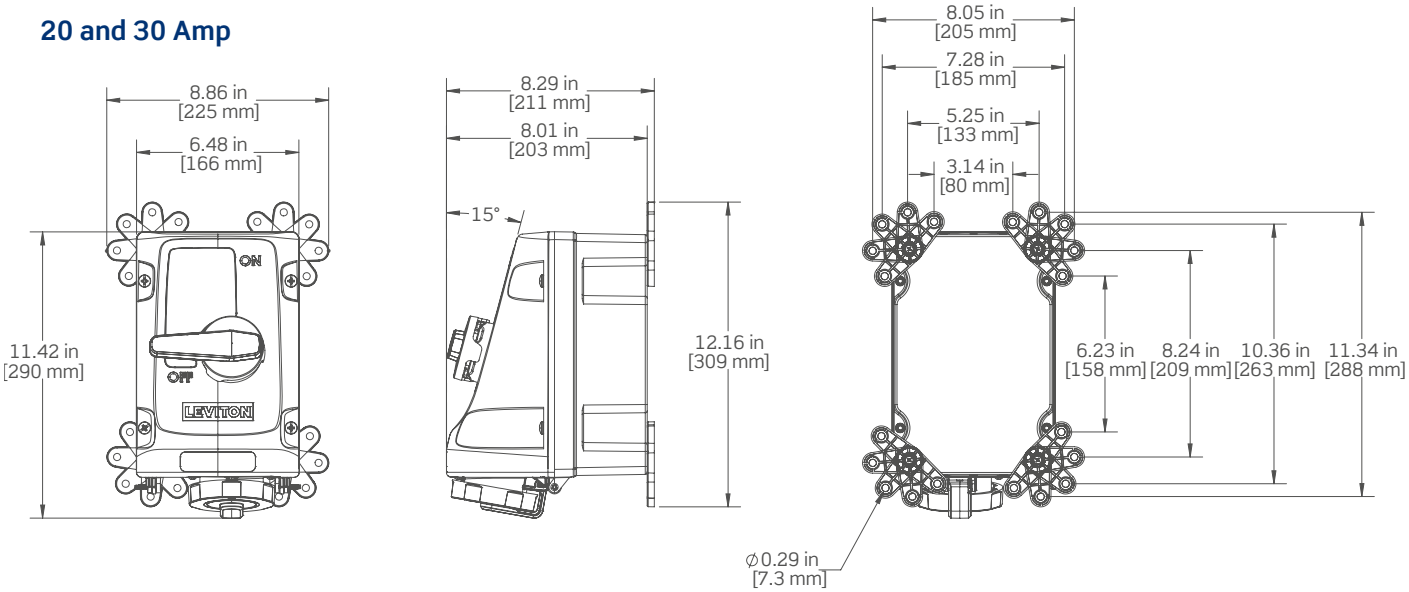

60 Amp

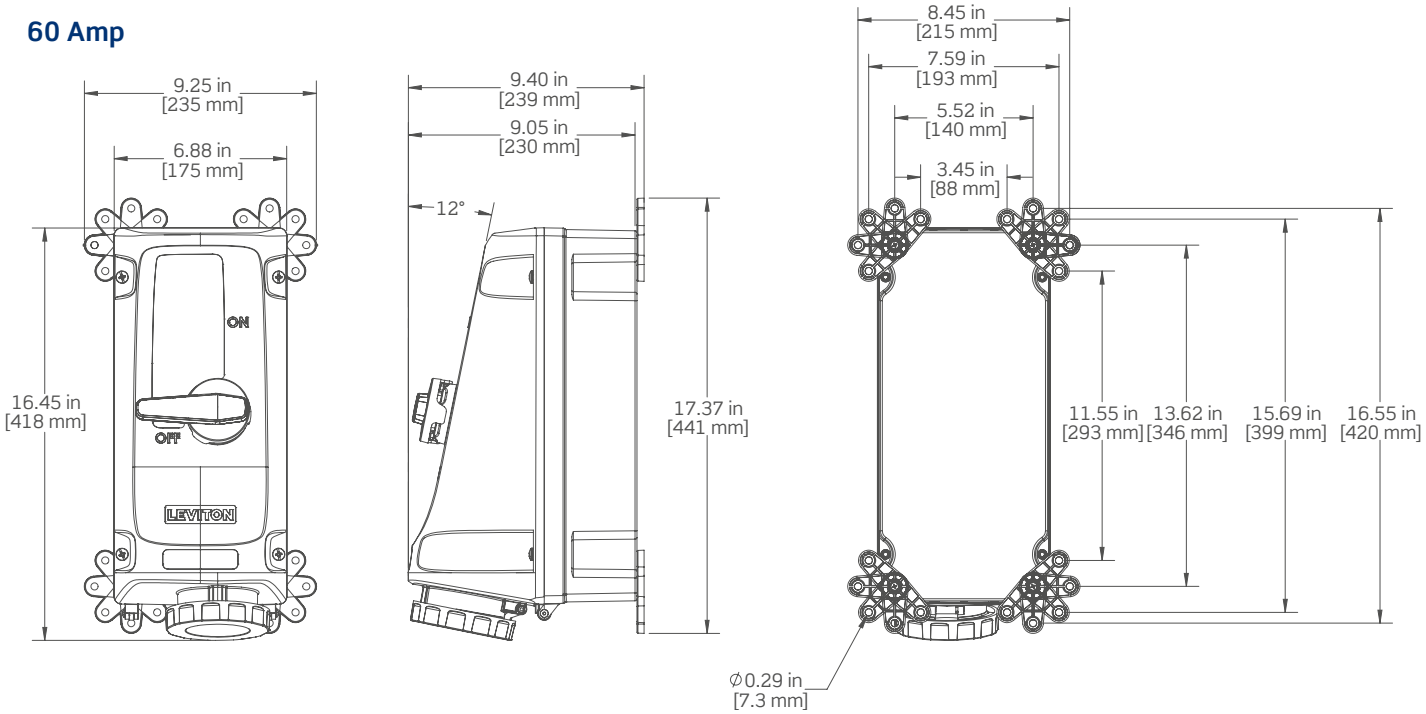

Visit our Website at:
www.leviton.com/LEVseries
email: industrial@leviton.com

Leviton Manufacturing Co., Inc.
201 N Service Rd, Melville, NY 11747
Telephone: 1-800-323-8920 • FAX: 1-800-832-9538
Tech Line: 1-800-824-3005 (M-F 8AM-10PM; Sat 9AM-7PM; Sun 9AM-5PM)

© 2021 Leviton Manufacturing Co., Inc. All rights reserved.