SLX-D

Wireless System

Shure SLX-D Digital Wireless system guide. Includes how to set up receiver, check sound and gain, and see groups and channels.

Version: 5.7 (2024-A)

Table of Contents

SLX-D Wireless System **4**

Overview **4**

Features 4

System Components **4**

SLX-D Transmitters 4

SLXD4 / SLXD4D Receiver 5

SLXD5 Bodypack Receiver 6

SLXD4 Setup **7**

SLXD5 Setup **8**

SLXD4 Hardware Callouts 9

SLXD5 Hardware Callouts 11

Navigating the Receiver Menus 13

Transmitters 17

Transmitter Menu Options and Navigation 19

Locking and Unlocking the Receiver Controls 20

Batteries and Chargers **21**

Microphone Battery Installation 21

Setting the AA Battery Type 22

Shure SB903 Rechargeable Battery 22

Important Tips for Care and Storage of Shure Rechargeable Batteries 25

Average Charging Times 25

Sound Check and Gain Adjustment **25**

SLXD4 26

SLXD5 26

System Set Up **26**

Creating Audio Channels 26

What are Groups and Channels? 26

Scan and IR Sync 27

Manual Frequency Selection 27

Using the Guided Frequency Setup 27

Linking Two Transmitters to a Receiver 28

Multi-Mic Mode 28

Adding SLX-D to Other Shure Wireless Systems 30

Radio Frequency (RF) Settings **30**

Setting the Transmitter RF Power 30

Networking **30**

Connecting to a Network 30

Automatic IP Addressing 30

Configuration Tips 30

Network Troubleshooting 31

Connecting to an External Control System 31

Firmware Updates **31**

Updating the Transmitter Firmware 32

Firmware Release Requirements 32

Mount the SLXD4 Receiver in a Rack **32**

Installing Footpads 33

Optional Accessories **33**

Specifications **37**

Receiver Output Connectors 47

Transmitter Input 48

Frequency Range and Transmitter Output Power **48**

Frequencies for European Countries 49

Important Safety Information **50**

Explanation of Symbols 50

Important Safety Instructions 50

Safety Information for Batteries 51

Safety and Regulatory Information for Battery Chargers 52

Important Product Regulatory Information **52**

Introduction to EMC 52

Regulatory Information for Wireless Products Utilizing TV Frequency Bands 53

Environmental Regulatory Information 55

Battery Regulatory Information 56

Certifications **56**

Energy Efficiency 56

Certification and Compliance Markings 56

SLX-D
Wireless System

Overview

SLX-D Digital Wireless delivers clear audio and stable RF performance with easy setup and rechargeability options. SLX-D is built to handle a wide range of applications, from day-long conferences to nighttime performances.

Automatic channel scan and IR sync are even easier with a guided setup feature programmed into each SLX-D wireless receiver. Manage multiple-system group scans and firmware updates with third-party setup and control via Ethernet. Operate up to 32 compatible systems per 44 MHz band for up to 8 hours from 2 AA batteries, or add Shure SB903 rechargeable batteries and charger accessories. SLX-D provides >118 dB dynamic range and stable, efficient RF transmission for a selection of handheld, lavalier and headset microphones.

Features

- Transparent 24-bit digital audio
- Extended 20 Hz to 20 kHz frequency range (microphone dependent)
- 118 dB dynamic range
- Digital predictive switching diversity
- 44 MHz tuning bandwidth (region dependent)
- 32 available channels per frequency band (region dependent)
- Up to 10 compatible systems per 6MHz TV band; 12 systems per 8 MHz band
- Easy pairing of transmitters and receivers over IR scan and sync
- Automatic channel scan
- Link multiple receivers for group scan and firmware updates via Ethernet port
- Compatible with Shure Wireless Workbench® control software
- Remote monitoring and control via ShurePlus™ Channels app
- Third-party setup and control via Ethernet
- Elegant and easy-to-use interface with high-contrast LCD menu
- Guided setup mode installed in each SLX-D receiver
- Transmitters use 2 AA batteries or Shure SB903 rechargeable battery
- System configurations include handheld transmitters with interchangeable microphone capsules, bodypacks with a range of lavalier, headset and instrument microphones and single and dual rack-mountable receivers.

System Components

Your SLX-D system is available in multiple configurations of transmitters, receivers, and microphones to meet your specific needs. For a full list of available system configurations, visit shure.com or contact your local sales rep.

SLX-D Transmitters

①

SLXD1 bodypack (BP) transmitter

②

SLXD2 handheld (HH) transmitter

③

SLXD3 plug-on (PO) transmitter

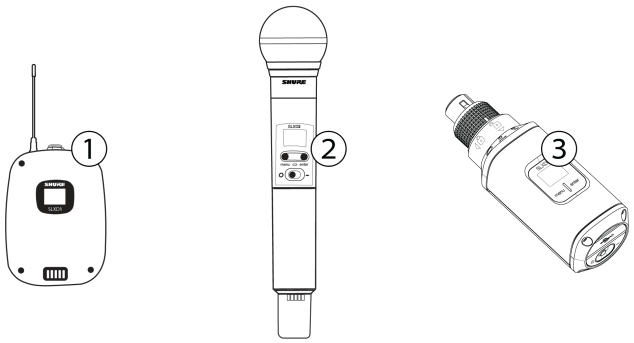

SLXD4 / SLXD4D Receiver

①

Rack mounting hardware

②

¼-wave antennas (2)

③

Power supply

④

1.5V AA batteries (2)

⑤

SLXD4 or SLXD4D receiver

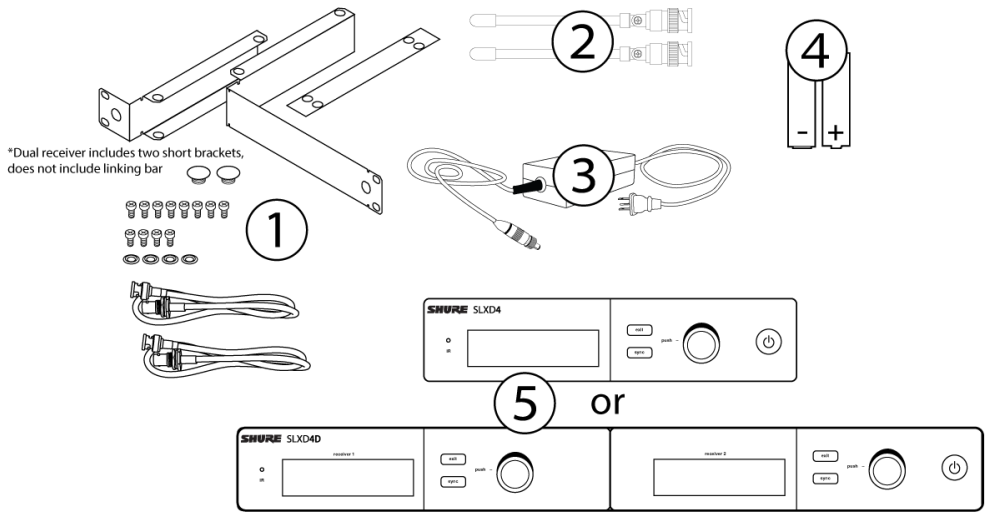

SLXD5 Bodypack Receiver

①

SLXD5 portable receiver

②

Locking 3.5mm-to-XLR cable (18")

③

Locking 3.5mm audio extender cable (16")

④

1.5V AA batteries (2)

⑤

Standard ¼" thread non-conductive camera shoe adapter

Note: *Use this adapter to prevent ground loop noise*

⑥

Zippered vinyl bag (black)

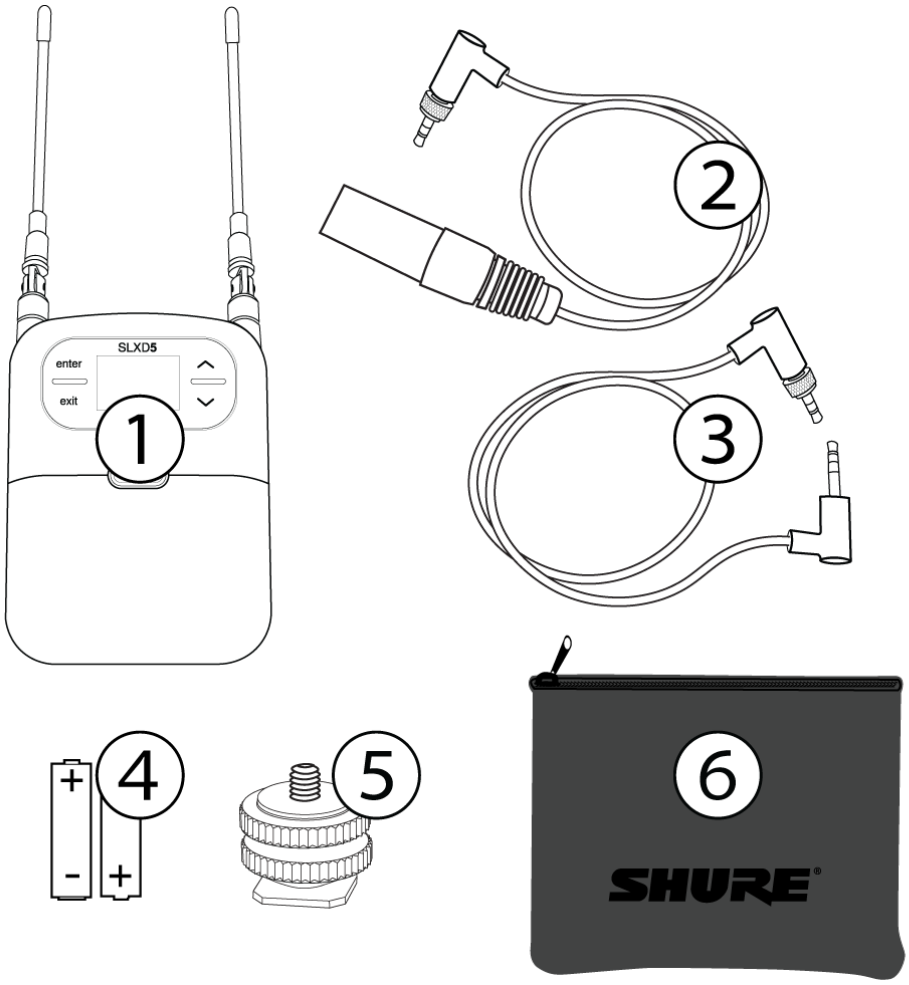

SLXD4 Setup

1. Attach the included antennas to the back of the receiver.

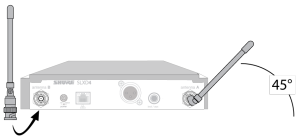

2. Connect the power supply to the receiver and plug the cord into an AC power source.

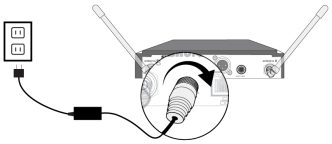

3. Connect the audio output to an amplifier or mixer.

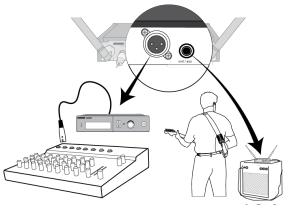

4. Press the power button on the receiver. Use the menu to set the system to microphone (mic) or instrument (line) level as appropriate.

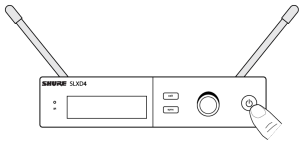

SLXD5 Setup

1. With the power switch in the O (off) position, insert the battery or connect the USB-C port on the bottom to a suitable power source.

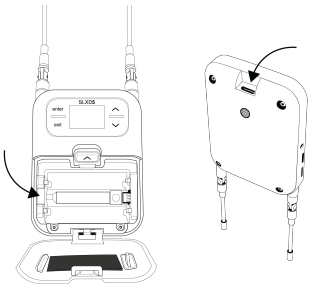

2. Connect the audio output to a camera or recorder.

Note: *Set the* Audio Out *to* Dual Mono *for 3.5mm devices, or to* Balanced (Mono) *for XLR devices in the receiver menu.*

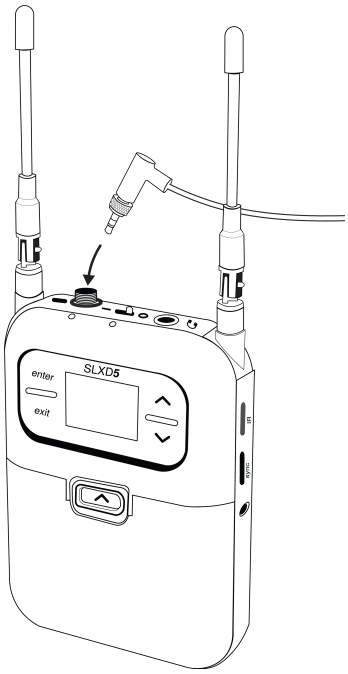

3. Turn on the power by pushing the switch to the I (on) position. Use the menu to set the system to microphone (mic) or instrument (line) level as appropriate.

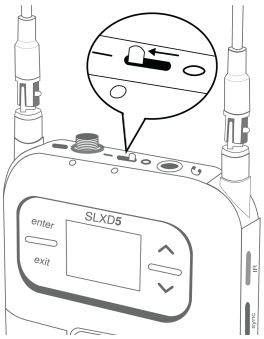

SLXD4 Hardware Callouts

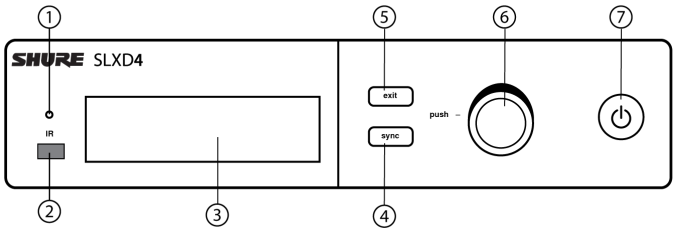

① Sync LED

- Flashing: IR sync mode is enabled

- Solid: Receiver and transmitter aligned for IR sync

② IR port

Align with the transmitter IR port during an IR sync to program transmitters.

③ Display

Shows menu options, receiver and transmitter settings.

④ Sync button

Press to activate IR sync.

⑤ Exit button

Press to cancel and exit the current operation.

⑥ Control knob

Change menu parameters. Push knob to confirm changes.

⑦ Power button

Powers receiver on or off.

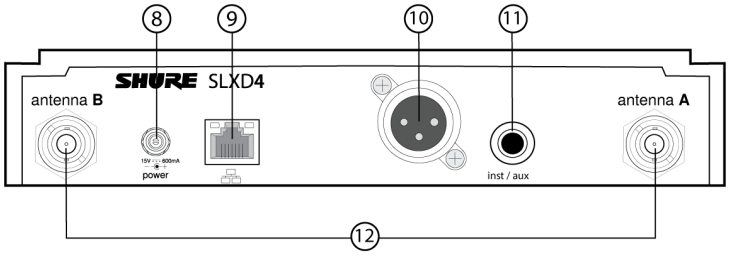

⑧ Power supply port

Connection point for DC power supply.

⑨ Ethernet port

For network connection.

- Amber LED (network speed):

  off = 10 Mbps, on = 100 Mbps

- Green LED (network status):

  off = no network link, on = network link active

  flashing = rate corresponds to traffic volume

⑩ XLR audio output

Balanced (1: ground, 2: audio +, 3: audio -)

⑪ 1/4" instrument/auxiliary output

Impedance Balanced (Tip: audio+, Ring: audio-, Sleeve: ground)

⑫ Antenna connectors

BNC connector for receiver antennas.

SLXD5 Hardware Callouts

① Antennas

Dual integrated ¼-wave receiver antennas

② ⅛" (3.5mm) camera audio output

Balanced (Mono) and Dual Mono output modes available

③ Power switch

Powers receiver on or off.

④ ⅛" (3.5mm) headphone output

Headphone monitoring output

⑤ RF LED

- Blue: Receiving RF signal from a paired Shure SLX-D transmitter

⑥ Power LED

- Green: Ready for use
- Red: Low battery
- Yellow:

  Flashing = Charging

  Solid = Error, or unit is powered by external power source

⑦ Enter button

Press to confirm the current selection.

⑧ Exit button

Press to cancel and exit the current operation.

⑨ Display

Shows menu options, receiver and transmitter settings.

⑩ Up/down buttons

Change menu parameters. Can be set as volume controls in the `Device` > `Buttons` `Control` menu.

⑪ Battery door latch

Push up to access battery compartment.

⑫ IR Window

Align with the transmitter IR port during an IR sync to program transmitters. Send frequency lists to other portable receivers using multi-mic mode.

⑬ Sync button

Press to activate IR sync.

⑭ Belt clip mounting holes

Insert belt clip prongs to attach; push clip towards front panel to remove.

⑮ Tripod connector

Standard ¼" internally threaded connector for included non-conductive camera shoe adapter, or tripod mounting.

⑯ USB-C port

Connect USB-C cable to power on, charge, and update firmware.

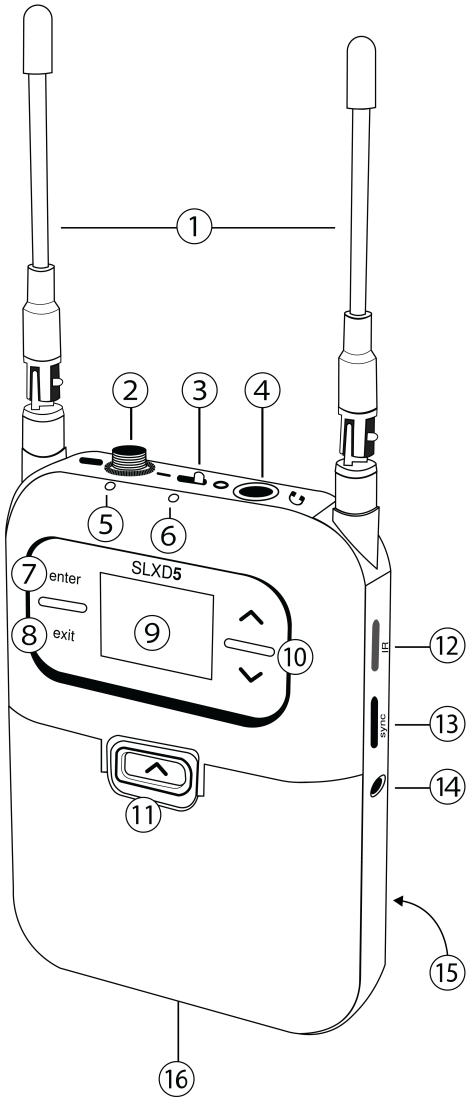

Navigating the Receiver Menus

The receiver has a main menu for setup and configuration and an advanced menu to access additional receiver functions. Use the control knob to navigate menu screens and confirm selections; use the exit button to return to the previous level.

SLXD4 Menus and Configuration

Push the control knob button to access the menu, and rotate to advance to the next menu screen.

1. Frequency Setup	**1.1 Guided Frequency Setup**	Step-by-step instructions to initialize a new system, or to add a receiver to an existing system
	1.2 Group Scan	Receiver automatically scans for the best available group, if applicable. **Note:** Some bands consist of only a single group. RF performance is the same in single-group bands as in bands that support multiple groups.
	1.3 Channel Scan	Receiver automatically scans for available channels within the selected group
	1.4 Manual Frequency Setup	Manually tune the receiver to a desired frequency
2. Channel Name	Customize the channel name	
3. Gain	Monitor audio levels and adjust the receiver gain	
4. Mic/Line Level	Switch between output levels	
5. Advanced Settings	**5.1 Device Lock**	• Unlock: Receiver is unlocked • Lock Menu: Receiver settings are locked • Lock Menu & Power: Receiver settings and power button are locked
	5.2 Network Configuration	Switch between automatic and manual IP addressing
	5.3 Controller Access	Block or allow third-party control access
	5.4 Transmitter Preset	Apply and sync transmitter presets
	5.5 Device Preset	Save current receiver settings or restore last saved settings

	5.6 Factory Reset	Restores all settings to factory defaults following a system reboot
	5.7 Transmitter Firmware	Update transmitter firmware using IR sync
	5.8 About	Displays firmware version and serial number
6. Help	Provides a link to additional materials (http://help.shure.com/slxd4)	

SLXD5 Menus and Configuration

From the home screen, press Enter to see your menu options. Use the arrow keys to cycle through options, push Enter to confirm your selection, or press Exit to return to the previous screen.

Frequency	**Channel Scan** Arrow keys change the selected group as needed, Enter automatically scans for available channels within the selected group **Group Scan** Receiver automatically scans for the group with the most available channels, if applicable. Arrow keys change the group as needed, Enter accepts the selected group. ***Note:*** *Some bands consist of only a single group. RF performance is the same in single-group bands as in bands that support multiple groups.* **Manual Setup** Manually tune the receiver to a desired frequency
Audio Out	**Audio Out** Select Balanced (Mono) for XLR devices, or Dual Mono for 3.5mm devices, and adjust gain **Headphone** Adjust headphone gain **Mic/Line** Switch between output levels
Channel Name	Customize the channel name

Device	**Device Lock** ◦ Unlock: Receiver is unlocked ◦ Menu Only: Receiver settings are locked ◦ Menu & Power: Receiver settings and power button are locked **Device Preset** Save current receiver settings or restore last saved settings **Battery** To ensure accurate battery metering, set the battery type to match the installed AA battery type. ***Note:*** *Menu is not selectable when Shure rechargeable batteries are installed.* **Buttons Control** Determine the function of the up/down buttons from the home screen: ◦ Audio Out: Change audio output gain ◦ Headphone: Change headphone volume **Display** Set the OLED display timeout **Tone Generator** Turn the continuous test tone on or off, and set volume in dB **Factory Reset** Restores all settings to factory defaults following a system reboot **About** Displays firmware version and serial number
TX (Transmitter Settings)	**Tx Presets** Apply and sync transmitter presets: ◦ **Mic Offsets:** Match audio levels between transmitters used in a combo system. Range is 0 to 21 dB (3 dB increments). ◦ **SLXD3 Pad/Boost:** Adjust the pad to avoid overloading the audio input or add a boost to low-output sources: -12 dB: Use with high output sources, such as line levels and point-to-point applications. Off (default): Use with typical microphones. +12 dB: Use with low output sources.

	◦ **RF Power:** Select an RF power setting: **HH/BP:** Low = 1 mW High = 10 mW No change **SLXD3 PO:** Low = 1 mW Normal = 10 mW High = 30 mW No change ◦ **Auto Lock:** Turn the transmitter auto lock On or Off ◦ **Lock Type:** Determine auto lock behavior: Menu Only: Locks the menu to prevent transmitter settings from being changed Menu & Power: Locks the menu and disables the power switch ◦ **Battery Type:** To ensure accurate battery metering, set the battery type to match the installed AA battery type. **Note:** Menu is not selectable when Shure rechargeable batteries are installed ◦ **High Pass:** Turn the high pass filter On or Off ◦ **Phantom:** Adds phantom power for condenser microphones (SLXD3 only). Select +12V or +48V as required by the microphone. **Tx Firmware** Update transmitter firmware using IR sync **Tx Factory Reset** Reboots the transmitter and restores all settings to factory defaults
Multi-Mic Mode	**Enter Mode/List** Enters Multi-Mic Mode and displays the existing list ◦ Select a list item and press Enter to rename, set gain, or delete that item ◦ Press the Sync button to IR sync the selected frequency to a transmitter **Create List** Initiates a group scan to determine available frequencies, creates a new list from those frequencies **Share List** Copy the existing Multi-Mic Mode list to another SLXD5 using IR sync **Delete List** Clears all list items
Help	Provides a QR code link to additional materials

Transmitters

① Power LED

- Green = Unit is powered on
- Red = Low battery

② On/off switch

Powers the transmitter on or off.

③ Display

View menu screens and settings. Press any control button to activate the display.

④ IR port

Align with the receiver IR port during an IR sync for automated transmitter programming.

⑤ Menu navigation buttons

menu = Use to navigate between menu screens.

enter = Press to confirm and save parameter changes.

⑥ Battery compartment

Requires 2 AA batteries or a Shure SB903 rechargeable battery.

⑦ Battery cover

Protects battery compartment during use.

⑧ Bodypack antenna

For RF signal transmission.

⑨ Handheld integrated antenna

For RF signal transmission.

⑩ Microphone cartridge

Interchangeable with a variety of Shure cartridges.

⑪ TA4M input port

Connects to a 4-Pin Mini Connector (TA4F) microphone or instrument cable.

⑫ Locking XLR connector

Connection point for wired microphones, cables, and boom poles, among other things. To release the XLR connector, turn the ring counterclockwise and push in.

⑬ Microphone LED

Indicates audio input from connected microphone, regardless of receiver status.

⑭ USB-C port

Connect USB-C cable to power on or charge transmitter.

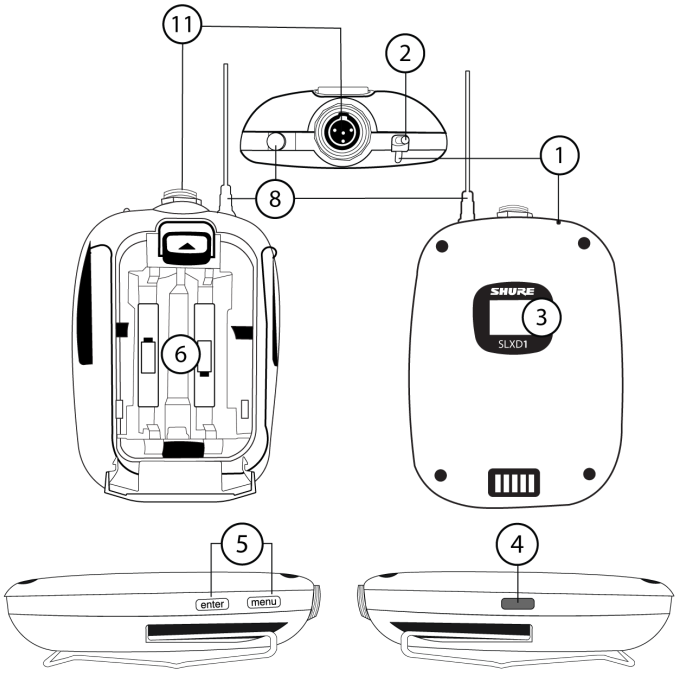

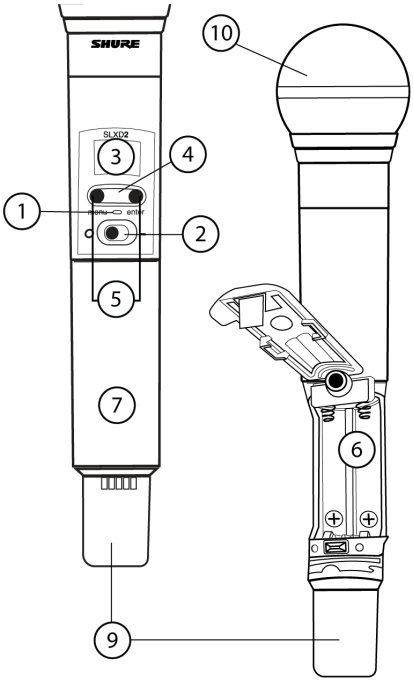

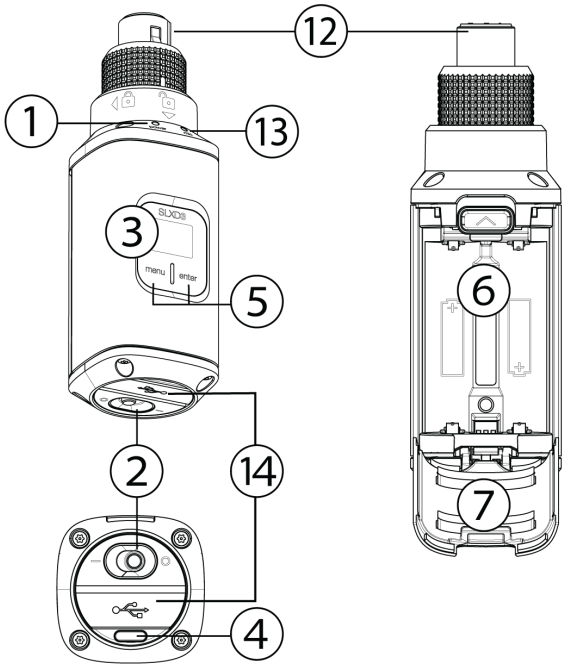

Transmitter Menu Options and Navigation

The transmitter features individual menu screens for setting up and adjusting the transmitter. To access the menu options from the home screen, press the menu button. Each additional press of the menu button advances to the next menu screen. Use the enter button to select and confirm options on the active menu screen.

Home Screen	Use the enter button to select one of the following home screen displays: • Channel name/Group and channel/Battery icon • Channel name/Frequency/Battery icon • Channel name/Battery icon/Group and channel • Channel name/Battery icon
Mic Offset	Match audio levels between two transmitters used in a combo system. Range is 0 to 21 dB (3 dB increments).
RF Power	Select an RF power setting: • 1 mW • 10 mW • 30 mW* *SLXD3 only
High Pass	Turn the high pass filter On or Off
Battery	To ensure accurate battery metering, set the battery type to match the installed AA battery type.

	Note: Menu is not selectable when Shure rechargeable batteries are installed.
Auto Lock	Turn the transmitter auto lock on or off
Lock Type	Determine auto lock behavior: • Menu Only: Locks the menu to prevent transmitter settings from being changed • Menu & Power: Locks the menu and disables the power switch
Phantom Power*	Select a phantom power setting: • Off (default setting) • +12 V • +48 V *SLXD3 only
Pad/Boost*	Select input pad or boost to avoid overloading the audio input, or increase low-output audio sources: • Off (default setting) • Pad: −12 dB • Boost: +12 dB *SLXD3 only
About	Displays the firmware, hardware, and band information

Locking and Unlocking the Receiver Controls

The following control lock options can be accessed under `5. Advanced Settings` > `5.1 Device Lock`:

- Unlock: receiver controls are unlocked
- Lock Menu: prevents access to menu items (receiver can still be powered off)
- Lock Menu & Power: disables the power switch as well as menu controls

Select the desired option and press the control knob to confirm.

Transmitter Auto Lock

The transmitter controls can be locked or unlocked by selecting On (locked) or Off (unlocked) from the transmitter Auto Lock menu. When auto lock is enabled, the transmitter controls lock when you return to the home screen.

Note: The enter button can still be used to change the home screen display on a locked transmitter.

To activate auto lock:

1. Press the menu button to navigate to the Auto Lock settings.
2. Use the enter button to edit and the menu button to select On.
3. Press enter to save. The lock icon appears on the display to confirm that the control locks are enabled.

To unlock the transmitter and deactivate auto lock:

1. Press enter then menu to unlock the transmitter controls.

2. Navigate to the Auto Lock settings and select Off.
3. Press enter to save. The transmitter will no longer lock when you return to the home screen.

Batteries and Chargers

Microphone Battery Installation

Important: To avoid damaging transmitters, only use Shure SB903 Li-ion rechargeable batteries or 1.5V AA batteries.

Bodypack / Plug-On:

1. Push the tab up and open the battery door to access the battery compartment.
2. Place a Shure SB903 Li-ion rechargeable battery **or** 2 AA batteries in the compartment.
3. Close the battery door.

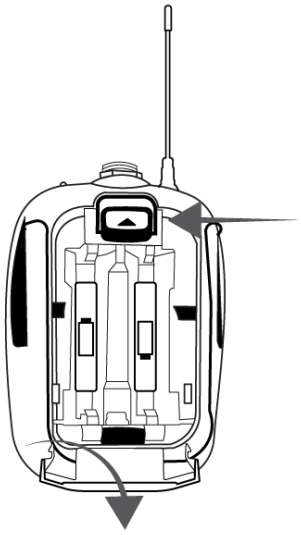

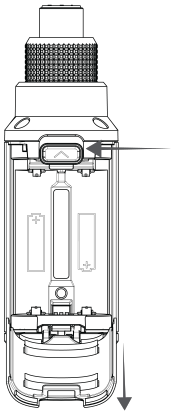

Handheld:

1. Remove the battery cover to access the battery compartment.
2. Lift the battery door to open the battery compartment.
3. Place a Shure SB903 Li-ion rechargeable battery **or** 2 AA batteries in the compartment.
4. Replace the battery cover.

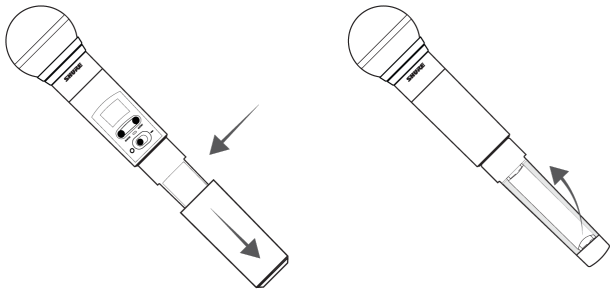

Setting the AA Battery Type

To ensure accurate display of transmitter runtime, set the battery type in the transmitter menu to match the installed AA battery type (the default setting is Alkaline). If a Shure rechargeable battery is installed, selecting a battery type is not necessary and the battery type menu will not be displayed.

1. Press the menu button to navigate to the Battery screen.
2. Press enter, then use the menu button to select the installed battery type:
   - Alkaline = Alkaline
   - NiMH (nickel metal hydride)
   - Lithium (non-rechargeable, 1.5V max)
3. Press enter to save.

Shure SB903 Rechargeable Battery

The SB903 lithium-ion rechargeable battery powers the SLX-D transmitters. Use the SBC10-903 single bay or SBC203 dual bay chargers to recharge SB903 batteries.

Important: Always fully charge a new battery before first use.

To fully charge a new SB903 battery, it must be placed directly in the charger. After the first charge, the battery can be charged by docking the transmitter in the SBC203 dual-bay charging station.

Single Bay Charger

The SBC10-903 single bay charger offers a compact charging solution.

1. Plug the charger into an AC power source or USB port.
2. Insert a battery into the charging bay.
3. Monitor the charging status LEDs until charging is complete.

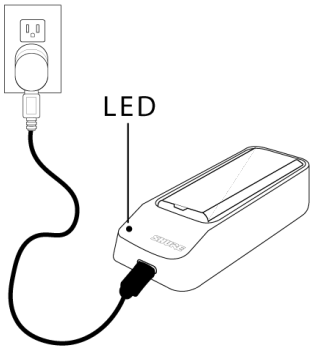

Charging Status LEDs

Description	Color	State
Ready for Use	Green (solid)	Device is fully charged
Charging	Red (flashing)	Charging
Error	Yellow (quick flashing)	Battery or power supply error
Not charging	Off	Power supply is disconnected, or no device is docked in the charging bay

Dual Bay Chargers

The SBC203 dual-bay charger can charge individual batteries or batteries installed in transmitters.

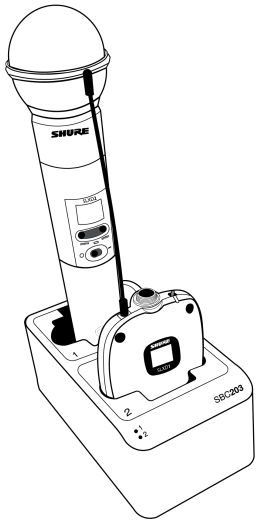

1. Plug the charger into an AC power source.
2. Insert batteries or transmitters into the charging bay.

   IMPORTANT: Insert transmitters facing forward to avoid damage.

3. Monitor the charging status LEDs until charging is complete.

Charging Status LEDs

Description	Color	State
Ready for Use	Green (solid)	Device is fully charged
Charging	Red (flashing)	Charging
Error	Yellow (quick flashing)	Battery or power supply error*
	Yellow (slow flashing)	Outside of operating temperature range
Not charging	Off	Power supply is disconnected, or no device is docked in the charging bay

***** If an error occurs when a transmitter is docked in the charger, remove the battery from the transmitter and place directly into the charger. If the error persists, contact Shure Technical Support.

SBC-DC-903 DC Adapter Battery Eliminator for SLXD5

The SBC-DC-903 is a voltage adapter that takes the place of an SB903 battery in the SLXD5 bodypack receiver, allowing you to custom-wire connectors to suit specific outputs. The included battery door replacement provides an opening for the power cable.

SBC80-903 Battery Charger

The SBC80-903 cradle charger holds eight SB903 batteries and is designed to fit into a rackmount drawer. It may be used in any appropriate location with adequate space and ventilation.

Power

1. Connect DC power cable to input jack on back of charger.
2. Finger tighten lock nut for a secure connection.
3. Connect power cable to AC Adapter.

WARNING:

- Do not use pliers or any other tools to tighten lock nut. DC power cable must be attached before charger unit is installed.
- Do not plug in power supply unit until DC connection and charger are in place.
- After securing the charger, plug the power cable into a properly grounded outlet.

The SBC80-903 has no power switch. When plugged in, the charger is ready. The LEDs illuminate after batteries are inserted.

Charging Status LEDs

To charge, place batteries into the charging bays with slotted sides down. The LEDs illuminate to indicate battery status.

Charging Status LEDs

Description	Color	State
Ready for Use	Green (solid)	Device is fully charged
Charging	Red (flashing)	Charging
Error	Yellow (quick flashing)	Battery or power supply error

Description	Color	State
	Yellow (slow flashing)	Outside of operating temperature range
Not charging	Off	Power supply is disconnected, or no battery is inserted in the charging bay

Important Tips for Care and Storage of Shure Rechargeable Batteries

Proper care and storage of Shure batteries results in reliable performance and ensures a long lifetime.

- Always store batteries and transmitters at room temperature
- Ideally, batteries should be charged to approximately 40% of capacity for long-term storage
- During storage, check batteries every 6 months and recharge to 40% of capacity as needed

Average Charging Times

SBC10-903

Time Charging	Operating Runtime	Capacity
1 hour	1 hour	15%
3 hours	4 hours	50%
5 hours : 30 minutes	>8 hours	100%

SBC203

Time Charging	Operating Runtime	Capacity
30 minutes	1 hour	15%
1 hour : 15 minutes	4 hours	50%
2 hours : 30 minutes	>8 hours	100%

SBC80-903

Time Charging	Operating Runtime	Capacity
30 minutes	1 hour	15%
1 hour : 15 minutes	4 hours	50%
2 hours : 30 minutes	>8 hours	100%

*based on battery with 100% health

Sound Check and Gain Adjustment

SLXD4

Navigate to the receiver's Gain screen to test the transmitter at performance levels. Adjust the gain to keep the audio indicator within the optimal range. Reduce the gain if there is audible distortion of the audio.

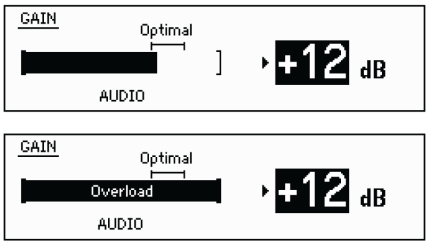

SLXD5

Navigate to `Audio Out` > `Mic/Line` to select the overall output level for your receiver. Set the gain for the Audio Out and Headphone outputs independently from their respective menu screens.

System Set Up

Creating Audio Channels

A wireless audio channel is formed when a receiver and transmitter are tuned to the same frequency. The SLX-D frequency setup provides 3 methods for tuning the receiver and transmitter to the same frequency:

- **Group and Channel Scan:** The receiver scans the RF spectrum for the best available frequency and an IR sync automatically tunes the transmitter to the receiver frequency
- **Manual Group, Channel, or Frequency Selection:** Manually set the receiver and transmitter to the same group and channel number, or frequency
- **SLXD4 Guided Frequency Setup:** A step-by-step guide to walk you through the process

Important! Before you begin a scan or frequency assignment:

- Connect all the receivers in your system using Ethernet cables. For best results, use a network switch when connecting 3 or more receiver units.
- Turn off all transmitters for the system you are setting up, to prevent interference with frequency scans.
- Turn on any other devices that may cause interference, such as other wireless systems, computers, CD players, large LED panels, and effects processors. This allows the scan to detect and avoid interference from these devices.

What are Groups and Channels?

To minimize interference, Shure wireless systems organize RF bands into predefined **groups** and **channels**. A group is a set of compatible frequencies within a frequency band. A single frequency within a group is a channel. Tune a receiver and transmitter to the best available channel within its group to set up your system.

Note: All receivers in the same band should be set to the same group. Because groups are band-dependent, some systems don't have multiple groups. Single-group bands have the same RF performance as those with multiple groups.

Scan and IR Sync

Group scan identifies the number of available channels in each group, and automatically assigns an available channel within your selected group. Perform a channel scan if you want to find a new channel, or if you are using the manual frequency selection method (see **Manual Frequency Selection**).

To perform a group scan:

1. Turn off all transmitters you plan to use with your system, and select `Frequency` > `Group Scan`.
2. The group with the most available channels is displayed. Use the arrow buttons to change the group number and view available channels in each group.
3. Push the Enter button to set the receiver to the group and channel shown on the display.

To perform a channel scan:

1. Turn off all transmitters you plan to use with your system, and select `Frequency` > `Channel Scan`.
2. Use the arrow buttons to select the group for your receiver. The group should be the same as other receivers in the same frequency band.
3. Push the Enter button to start the channel scan.
4. Confirm the selected channel with Enter, or use the arrow buttons to view other available channels.

After running the appropriate scan, turn on the transmitter you plan to use with this receiver, align the infrared (IR) ports on the transmitter and receiver, and push the sync button.

Manual Frequency Selection

To manually adjust group, channel or frequency:

1. Enter the Manual Frequency Setup screen on the receiver and select and adjust the group (G), channel (C), or frequency (MHz) as needed.
2. Select Apply and confirm to save your settings.
3. Align the infrared (IR) ports on the transmitter and receiver, and push the sync button.

Using the Guided Frequency Setup

SLXD4 and SLXD4D systems include a guided frequency setup to walk through the group and channel scan process.

To set up a new SLXD4 or SLXD4D system:

1. Select Initialize My System and push the control knob to continue.
2. Turn off all transmitters you plan to use with your system, and select start scan.
3. After the scan is done, push the control knob to assign frequencies to the receiver.
4. Turn on the transmitter you plan to use with this receiver.
5. Align the infrared (IR) ports on the transmitter and receiver, and push the sync button.

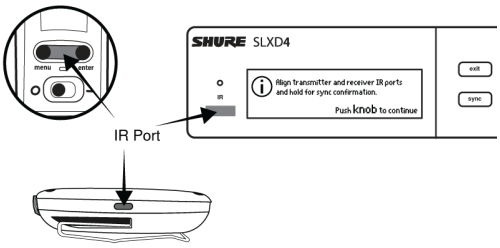

To add a new SLXD or SLXD4D receiver to your system:

1. Select Add Receiver to My System.
2. To change the group, rotate the control knob to select G:, push to select, rotate to change the number, push again to confirm.
3. Select start scan.
4. After the scan completes, push the control knob to apply the receiver channel.
5. Turn on the transmitter you plan to use with this receiver.
6. Align the infrared (IR) ports on the transmitter and receiver, and push the sync button.

Linking Two Transmitters to a Receiver

Linking two transmitters to a receiver offers the flexibility to provide a performer with either a handheld or bodypack transmitter to meet their preference. For performances requiring instrument changes, two bodypack transmitters can be linked to a single receiver.

Note: Only turn on and operate one transmitter at a time to prevent interference between the transmitters.

Syncing the Transmitters to the Receiver

Both transmitters must be individually linked to the receiver by performing an IR Sync.

1. Turn on the first transmitter and perform an IR Sync with the receiver.
2. Perform a sound check and adjust the transmitter gain if necessary. When finished, turn off the transmitter.
3. Turn on the second transmitter and perform an IR Sync with the receiver.
4. Test the transmitter at performance conditions and adjust the transmitter gain if necessary. When finished, turn off the transmitter.

Matching Audio Levels with Mic Offset

When linking two transmitters to a receiver, there may be a difference in volume levels between microphones or instruments. If this occurs, use the Mic Offset function to match the audio levels and eliminate audible volume differences between transmitters. If using a single transmitter, set Mic Offset to 0 dB.

1. Turn on the first transmitter and perform a sound check to test the audio level. Turn off the transmitter when finished.
2. Turn on the second transmitter and perform a sound check to test the audio level.
3. If there is an audible difference in the sound level between the transmitters, navigate to the Mic Offset menu on the transmitter to increase or decrease the Mic Offset to match the audio levels.

Multi-Mic Mode

Multi-mic mode uses a shared frequency list to set up multiple portable systems, or to monitor multiple transmitters using the arrow buttons on your SLXD5 receiver.

Once configured, any SLXD5 receiver in your system can receive audio from any microphone transmitter synced to a channel on your shared list. Use the receiver arrow buttons to highlight a channel ID, and audio changes are applied immediately.

Note: All SLXD5 receivers in your system must be in the same operating band.

Using shared lists:

From the Multi-Mic Mode menu:

- **Enter mode/list** opens any existing frequency list on your device.
  - Use the arrow buttons to highlight frequencies
  - Press Enter to change the selected channel's name, adjust the audio gain, or delete the frequency from the list
  - Add additional frequencies from the bottom of the list.
- **Create list** starts a group scan to identify available channels.
  - Use the arrow buttons to select the desired group and push Enter to confirm
  - Set the channel count to the number of transmitters in your system and push Enter to confirm
- **Share list** copies the list on your device to other SLXD5 receivers via IR sync.
- **Delete list** clears the list data stored on your device.

Setting up multiple systems:

1. Create a list on your first SLXD5 receiver (Receiver A):
   1. Select `Multi-Mic` > `Create list` and push Enter.
   2. After a group scan, the group with the most available channels is displayed. To choose a different group, use the arrow buttons and push Enter to confirm.
   3. Use the arrow buttons to change the channel count to match the number of systems in your setup (default is 10).
   4. Push Enter to confirm, then push Exit to return to the previous menu.
2. Share the list to other SLXD5 receivers in your system:
   1. On Receiver A, select `Multi-Mic` > `Share list` and push Enter.
   2. Align the IR ports of Receiver A and another SLXD5, then push the sync button on Receiver A to wirelessly share frequency lists. Repeat as needed for the receivers in your system.
3. Set receivers to the desired frequency:
   1. On any SLXD5 using your shared list, select `Multi-Mic` > `Enter mode/list` and push Enter.
   2. Use the arrow buttons to select the frequency you want to assign to this receiver.
   3. Push Exit once to return to the previous menu, or push 3 times to return to the Home screen. Your receiver is set to the selected frequency.
4. Sync the transmitters:
   1. On any SLXD5 using your shared list, select `Multi-Mic` > `Enter mode/list` and push Enter.
   2. Turn on an SLX-D transmitter.
   3. Use the arrow keys on the receiver to select the channel for that transmitter.
   4. Align the IR ports on the transmitter and receiver and push the sync button.

   Note: *All transmitters can be synced to the desired channel in your shared list from the same receiver, and pass audio to any receivers set to the same channel.*

Add or Edit Frequencies:

On any SLXD5 using your shared list, select `Multi-Mic` > `Enter mode/list`, and use the arrow buttons to select a frequency. Push the Enter button to:

- Rename the channel
- Change headphone output gain
- Delete this frequency from list

To add a new frequency, navigate to the bottom of the list and select Add Frequency. Use the arrow buttons to manually set the frequency, and push Enter to confirm.

Monitoring multiple transmitters:

Once multiple portable systems have been set up in Multi-Mic Mode, any of the SLXD5 portable receivers can monitor all transmitters in your system.

1. Select `Multi-Mic` > `Enter mode/list`.
2. Use the arrow buttons to select the frequency to monitor.
3. Listen to the audio through the SLXD5 headphone jack.

Adding SLX-D to Other Shure Wireless Systems

Use Shure's Wireless Workbench frequency coordination tool to find compatible frequencies across different Shure wireless systems. To get started, download the software from http://www.shure.com/wwb. For additional assistance, please visit http://www.shure.com/contact.

Radio Frequency (RF) Settings

Setting the Transmitter RF Power

The transmitter offers two RF power settings which determine the transmitter range.

- Low = 1 mW
- High = 10 mW

Use the Low setting when the transmitter and receiver are in close proximity.

1. Navigate to the transmitter RF power menu.
2. Use the menu button to select High or Low.
3. Press enter to save.

Networking

The receiver uses an Ethernet connection to network with other components and includes an internal DHCP client for automatic network configuration when connected to a DHCP enabled router.

Connecting to a Network

1. Insert an Ethernet cable in the Ethernet port on the rear of the receiver.
2. Connect the cable to a computer or router.
3. The port LEDs on the receiver will illuminate to indicate network connectivity and network traffic.

Automatic IP Addressing

1. Enable a DHCP service on the server or use a DHCP enabled router.
2. When the receiver is powered on, the DHCP server will automatically assign an IP address to the receiver.

Configuration Tips

- Use shielded Cat 5 or better Ethernet cables to ensure reliable network performance
- The LEDs on the Ethernet port illuminate indicating a network connection is active

- The network icon illuminates when the receiver detects additional Shure devices on the network
- All components must operate on the same subnet
- Use multiple Ethernet switches to extend the network for larger installations

Network Troubleshooting

- Use only one DHCP server per network
- All devices must share the same subnet mask
- All receivers must have the same level of firmware version installed
- Check the LED status of the network icon on the front panel of each device.
  - If the network icon is not illuminated, check the cable connection and the LEDs on the Ethernet port.
  - If the Ethernet port LEDs are not illuminated and the cable is plugged in, replace the cable and recheck the LEDs and network icon.

Connecting to an External Control System

The SLXD4 and SLXD4D receivers are compatible with external control systems such as AMX or Crestron via Ethernet. Use only one controller per system to avoid messaging conflicts.

- Connection: Ethernet (TCP/IP; SLX-D receiver is the client)
- Port: 2202

SLX-D blocks command strings by default. You can block or allow third-party controls in the `Advanced Settings` > `Controller Access` menu.

For a comprehensive list of SLX-D command strings, visit https://pubs.shure.com/command-strings/SLXD/en-US.

Firmware Updates

Firmware is embedded software in each component that controls functionality. Periodically, new versions of firmware are developed to incorporate additional features and enhancements. To take advantage of design improvements, new versions of the firmware can be uploaded and installed using the Shure Update Utility (SUU). Download the SUU from https://www.shure.com/en-US/products/software/shure_update_utility.

Perform the following steps to update the firmware:

CAUTION! Ensure the device has a stable network connection during the update. Do not turn off the device until the update is complete.

1. Connect the device and computer to the same network (set to the same subnet).
2. Open the SUU application.
3. Click the Updates button at the top of the window to open the Download Manager.

   Note: *This button will be labeled either* "Check for updates..." *or* "[#] updates available"

4. From the Download Manager, select the desired firmware versions.

   Tip: The dropdown in the upper right allows you to quickly Select: All or Select: None.

   Note: *After updating, you may need to clear your browser's cache to display updates to the device's web application.*

5. Click Download, and then Close the Download Manager. Downloaded firmware is listed and can be viewed and managed in the Firmware tab.
6. From the Update Devices tab, select the new firmware and press Send Updates to begin the firmware update, which overwrites the existing firmware on the device.

Updating the Transmitter Firmware

1. From the Device Configuration menu of the receiver: `Advanced Options` > `Tx Firmware Update`.
2. Align the infrared (IR) port on the transmitter with that on the receiver, and push the sync button.

   Important: Alignment must be maintained during the entire update cycle.

3. Once the sync is complete, the system is ready for use.

Firmware Release Requirements

All devices are part of a network with multiple communications protocols that work together to ensure proper operation. The recommended best practice is that all devices are on an identical release. To view the firmware version of each device on the network, navigate to device configuration and look under `(Settings)` > `Firmware`.

The format for Shure device's firmware is MAJOR.MINOR.PATCH. (Ex. 1.6.2 where 1 is the Major firmware level, 6 is the Minor firmware level, and 2 is the Patch firmware level.) At a minimum, devices that operate on the same subnet should have identical MAJOR and MINOR release numbers.

- Devices of different MAJOR releases are not compatible.
- Differences in the PATCH firmware release level may introduce undesired inconsistencies.

Mount the SLXD4 Receiver in a Rack

All accessories are supplied:

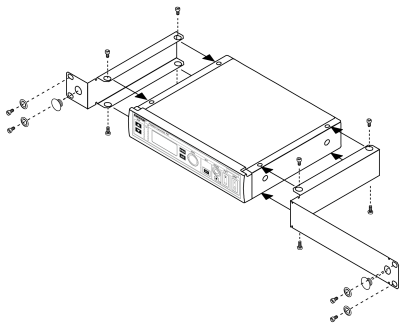

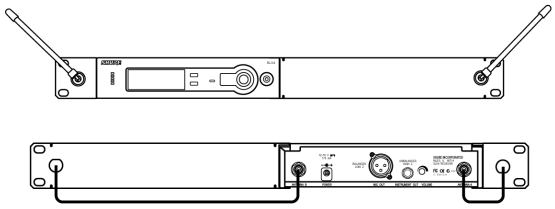

Installing Footpads

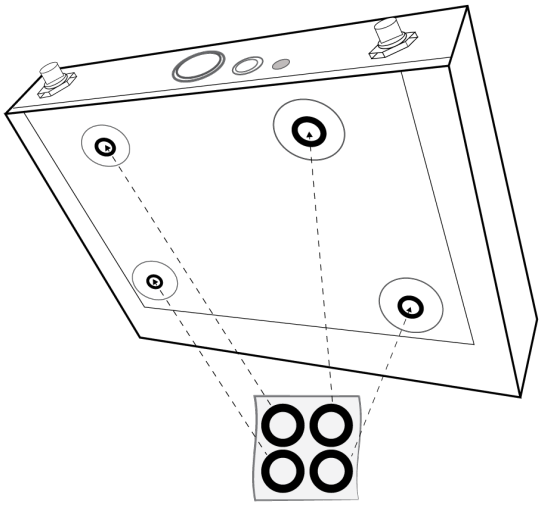

Optional Accessories

Batteries and Chargers

Shure Lithium-Ion Rechargeable Battery	SB903
8-Bay Cradle Charger	SBC80-903-AR
	SBC80-903-AZ
	SBC80-903-BR
	SBC80-903-CN
	SBC80-903-E
	SBC80-903-IN
	SBC80-903-J
	SBC80-903-K
	SBC80-903-TW
	SBC80-903-UK
	SBC80-903-US
Dual Docking Charger	SBC203-AR
	SBC203-AZ

	SBC203-BR
	SBC203-CN
	SBC203-E
	SBC203-IN
	SBC203-J
	SBC203-K
	SBC203-TW
	SBC203-UK
	SBC203-US
Single Battery Charger	SBC10-903-AR
	SBC10-903-AZ
	SBC10-903-BR
	SBC10-903-CN
	SBC10-903-E
	SBC10-903-IN
	SBC10-903-J
	SBC10-903-K
	SBC10-903-TW
	SBC10-903-UK
	SBC10-903-US
Battery Eliminator (for SLXD5 Bodypack Receiver)	SBC-DC-903

UHF Antenna Power Distribution Amplifiers

Antenna/Power Distribution System 470-960 MHz	UA844+SWB
	UA844+SWB-AR
	UA844+SWB-AZ
	UA844+SWB-BR
	UA844+SWB-C
	UA844+SWB-E
	UA844+SWB-J
	UA844+SWB-K

	UA844+SWB-TW
	UA844+SWB-UK
	UA844+SWB-IN
Antenna/Power Distribution System, Less cable 470-960 MHz	UA844+SWB/LC
	UA844+SWB/LC-AR
	UA844+SWB/LC-BR
	UA844+SWB/LC-C
	UA844+SWB/LC-E
	UA844+SWB/LC-UK
Ultra Wideband Antenna/Power Distribution System 174-1805 MHz	UA845UWB
	UA845UWB-AR
	UA845UWB-AZ
	UA845UWB-BR
	UA845UWB-C
	UA845UWB-E
	UA845UWB-IN
	UA845UWB-J
	UA845UWB-K
	UA845UWB-TW
	UA845UWB-UK
Ultra Wideband Antenna/Power Distribution System, Less cable 174-1805 MHz	UA845UWB/LC
	UA845UWB/LC-AR
	UA845UWB/LC-BR
	UA845UWB/LC-E
	UA845UWB/LC-UK

UABIAST

In-Line Power Supply	UABIAST-US
	UABIAST-UK
	UABIAST-BR
	UABIAST-AR

	UABIAST-E
	UABIAST-CHN
	UABIAST-IN
	UABIAST-K
	UABIAST-J
	UABIAST-AZ
	UABIAST-TW

In-Line Amplifiers and Antennas

In-Line Antenna Amplifier, 470-900 MHz	UA834WB
In-Line Antenna Amplifier, 902-960 MHz	UA834XA
Active Directional Antenna 470-790 MHZ	UA874E
Active Directional Antenna 470-698 MHZ	UA874US
Active Directional Antenna 470-900 MHZ	UA874WB
Active Directional Antenna 925-952 MHZ	UA874X
Directional Wideband Antenna for PSM Systems 470-952 MHz	PA805SWB
Directional Wideband Antenna for PSM Systems 650-1100 MHz	PA805X
Passive Omnidirectional Antenna 470-1100 MHz	UA860SWB
UHF Passive Antenna Splitter	UA221
Front Mount Antenna Kit (Includes 2 Cables And 2 Bulk-head)	UA600
Remote Antenna Bracket With BNC Bulkhead Adaptor	UA505
Helical Antenna, 470-900MHZ	HA-8089

Cables, Cases and Connectors

Coaxial Cable, BNC-BNC, RG58C/U TYPE, 50 OHM, 2 FT Length (0.6 M)	UA802
Coaxial Cable, BNC-BNC, RG58C/U TYPE, 50 OHM, 6 FT Length (2 M)	UA806
Coaxial Cable, BNC-BNC, RG8X/U TYPE, 50 OHM, 25 FT Length (7.5 M)	UA825

Coaxial Cable, BNC-BNC, RG8X/U TYPE, 50 OHM, 50 FT Length (15 M)	UA850
Coaxial Cable, BNC-BNC, RG213/U TYPE, 50 OHM, 100 FT Length (30 M)	UA8100
Ethernet Jumper Cable, 8"	C8006
Ethernet Cable, 3 FT.	C803
Ethernet Cable, 10 FT.	C810
Ethernet Cable, Ruggedized, 25 FT.	C825
Ethernet Cable, Ruggedized, 50 FT.	C850
Ethernet Cable, Ruggedized, 100 FT.	C8100
Water resistant cover for SLXD5 bodypack receiver	WA301
Non-conductive camera shoe adapter for SLXD5 body-pack receiver	WA311

1/2 Wave Omnidirectional Receiver Antennas

470-542 MHz	UA8-470-542
500-560 MHz	UA8-500-560
518-598 MHz	UA8-518-598
554-638 MHz	UA8-554-638
596-698 MHz	UA8-596-698
670-742 MHz	UA8-670-742
690-746 MHz	UA8-690-746
694-758 MHz	UA8-694-758
710-790 MHz	UA8-710-790
740-814 MHz	UA8-740-814
750-822 MHz	UA8-750-822
774-865 MHz	UA8-774-865
00-1000 MHz	UA8-900-1000

Specifications

System RF

RF Carrier Frequency Range

470–937.5 MHz, varies by region (See Frequency Range and Output Power table)

Working Range

100 m (328 ft)

Note: Actual range depends on RF signal absorption, reflection and interference.

RF Tuning Step Size

25 kHz, varies by region

JB band: 125 kHz

Image Rejection

>70 dB, typical

RF Sensitivity

−97 dBm at 10^{-5} BER

System Temperatures

Operating Temperature Range

-18°C (0°F) to 50°C (122°F)

Note: Battery characteristics may limit this range.

Storage Temperature Range

-29°C (-20°F) to 74°C (165°F)

Note: Battery characteristics may limit this range.

System Audio

Latency

3.2 ms

High-Pass / Low Cut Filter

150 Hz @ -12 db/oct

Note: Factory default is for the HPF to be off

Audio Dynamic Range

118 dB at 1% THD, A-weighted, typical

Total Harmonic Distortion
<0.02%

System Audio Polarity
Positive pressure on microphone diaphragm produces positive voltage on pin 2 (with respect to pin 3 of XLR output) and the tip of the 6.35 mm (with respect to the ring of the 6.35 mm output) output.

Mic Offset Range
0 to 21 dB (in 3 dB steps)

SLXD4 / SLXD4D Rack Receiver

Dimensions

SLXD4	42 x 197 x 152 mm (1.65 x 7.76 x 5.98 in.), H x W x D
SLXD4D	42 x 393 x 152 mm (1.65 x 15.47 x 5.98 in.), H x W x D

Weight

SLXD4	816 g, without antennas
SLXD4D	1451 g, without antennas

Housing
Galvanized Steel

Power Requirements
15 V DC @ 600 mA, supplied by external power supply (tip positive)

RF Input

Spurious Rejection
>75 dB, typical

Connector Type
BNC

Impedance
50 Ω

Phantom Power Protection

1/4" (6.35 mm)	Yes
XLR	Yes

Audio Output

Audio Frequency Response
20 Hz– 20 kHz (+1, -2 dB)

Gain Adjustment Range

-18 to +42 dB in 1 dB steps

Configuration

1/4" (6.35 mm)	Balanced (Tip = audio +, Ring = audio -, Sleeve = ground)
XLR	Balanced (1=ground, 2=audio +, 3=audio −)

Impedance

1/4" (6.35 mm)	1.3 kΩ (670 Ω Unbalanced)
XLR (line)	400 Ω (200 Ω Unbalanced)
XLR (mic)	150 Ω

Full Scale Output

1/4" (6.35 mm)	+15 dBV differentially (+9 dBV single)
XLR	LINE setting= +15 dBV, MIC setting= -15 dBV

Mic/Line Switch

30 dB pad

Networking

Network Interface

Single Port Ethernet 10/100 Mbps

Network Addressing Capability

DHCP or Manual IP address

Maximum Cable Length

100 m (328 ft)

SLXD5 Bodypack Receiver

Dimensions

107 × 68 × 25.3 mm (4.21 × x 2.68 x 1 in.), H×W×D

Weight

182 g

Housing

Aluminum

Power Requirements

Battery	Rechargeable Li-Ion, or 1.5 V AA batteries (2)
Power Supply	SBC-DC-903 Battery Eliminator, or 5V DC via USB-C

RF Input

Spurious Rejection
>75 dB, typical

Impedance
50 Ω

Phantom Power Protection
Yes

Antenna Type
¼ wave whip

Audio Output

Audio Frequency Response
20 Hz– 20 kHz (+1, -3 dB)

Connector Type
⅛" (3.5 mm), x2

Configuration

Balanced	Tip = audio +, Ring = audio -, Sleeve = ground
Stereo	Tip = left, Ring = right, Sleeve = ground

See drawing for details

Impedance (Camera)

Balanced Line	450 Ω
Balanced Mic	240 Ω
Stereo Line	400 Ω
Stereo Mic	200 Ω

Full Scale Output

Camera (balanced line)	15 dBV
Headphone	13mW @ 64 Ω load

SLXD1 Bodypack Transmitter

Battery Type
Rechargeable Li-Ion or 1.5 V AA batteries

Dimensions
98 x 68 x 25.5 mm (3.86 x 2.68 x 1 in.), H x W x D

Weight
89 g

Housing
PC/ABS

Audio Input

Connector
4-Pin male mini connector (TA4M)

Configuration
See drawing for details

Impedance
1 MΩ

Maximum Input Level
8.2 dBV (2.57 Vrms, 7.27 Vpp)

Preamplifier Equivalent Input Noise (EIN)
-118 dBV

RF Output

Antenna Type
1/4 wave

Occupied Bandwidth
<200 kHz

Modulation Type
Shure proprietary digital

Power
1 mW or 10 mW

See Frequency Range and Output Power table, varies by region

SLXD2 Handheld Transmitter

Battery Type
Rechargeable Li-Ion or 1.5 V AA batteries

Dimensions
37.1 x 176 mm (1.46 x 6.93 in.), D x L

Weight
147 g

Housing
Aluminum

Audio Input

Configuration
See drawing for details

Maximum Input Level
8.2 dBV (2.57 Vrms, 7.27 Vpp)

Note: Dependent on microphone type

RF Output

Antenna Type
Integrated Single Band Helical

Occupied Bandwidth
<200 kHz

Modulation Type
Shure proprietary digital

Power
1 mW or 10 mW

See Frequency Range and Output Power table, varies by region

SLXD3 Plug-On Transmitter

Battery Type
Rechargeable Li-Ion or 1.5 V AA batteries

Dimensions
126 × 41 × 41 mm (4.96 × 1.61 × 1.61 in.), L×W×D

Weight
200 g

Housing
Aluminum, zinc alloy, PC/ABS

Audio Input

Connector Type

XLR

See drawing for details

Maximum Input Level

Pad -12 dB	20.5 dBV
0 dB	8.5 dBV
Boost +12 dB	-3.5 dBV

1 kHz at 1% THD

Note: Dependent on microphone type

Phantom Power

+48 V(7 mA maximum), +12 V(15 mA maximum)

RF Output

Antenna Type

Dipole

Occupied Bandwidth

<200 kHz

Modulation Type

Shure proprietary digital

Power

1 mW / 10 mW / 30 mW

See Frequency Range and Output Power table, varies by region

Specific Absorption Rate (SAR)

< 0.17 W/kg

SB903 Rechargeable Battery

Charge Voltage

4.2 V (±0.03 V)

Charge Current

SBC10-903	220 mA
SBC203	625 mA (normal), 250 mA (reduced)*

SLXD3	650 mA
SLXD5	600 mA

* Normal = 10 °C to 45 °C (50 °F to 113 °F), reduced = 0 °C to 10 °C (32 °F to 50 °F)

Nominal Voltage
3.6 V

Nominal Capacity
1200 mAh

Housing
Molded Polycarbonate

Charging Temperature Range
0 °C to 45 °C (32 °F to 113 °F)

Dimensions
14.5 x 32.5 x 55.5 mm (0.57 x 1.28 x 2.19 in.), H x W x D

Weight
28 g

SBC10-903 Battery Charger

DC Input Voltage Range
5 V DC

Charge Current
USB-powered

220 mA

Charge Time
50% = 3 hours; 100% = 5 hours : 30 minutes

External Power Supply
SBC10-USB

Power Requirements
5 V DC, 1 A max.

Operating Temperature Range
0 °C to 45 °C (32 °F to 113 °F)

Dimensions
20.5 x 37.5 x 79.5 mm (0.81 x 1.48 x 3.13 in.), H x W x D

Weight
39 g

Housing
Molded Polycarbonate

SBC203 Battery Charger

Charge Current
625 mA or 250 mA

Lower current used when using another power source, or operating between 0℃ and 10℃

Charge Time
50% = 1 hour : 15 minutes; 100% = 2 hours : 30 minutes

External Power Supply
SBC10-USB15W or SBC10-USB15WS

Power Requirements
5 V DC, 3 A max.

Operating Temperature Range
0 °C to 45 °C (32 °F to 113 °F)

Dimensions
66.3 x 86.0 x 155 mm (2.61 x 3.38 x 6.13 in.), H x W x L

Weight
284 g

Housing
ABS

SBC80-903 8-Bay Battery Charger

Charge Current
625mA

Charge Time
50%=1 hour; 100%=3 hours

External Power Supply
PS60

Power Requirements
15V DC, 4A

Dimensions
30 mm x 173 mm x 146 mm (1.18 in. x 6.81 in. x 5.75 in.), H x W x D

Weight
375 g (13.2 oz.)

Storage Temperature Range
−20°F to 165°F (−29°C to 74°C)

Charging Temperature Range
32°F to 113°F (0°C to 45°C)

SBC-DC-903 DC Adapter Battery Eliminator

Input
5V to 24V DC

Output
3V DC, 500mA max

Dimensions
49.9 mm × 32.9 mm × 14.5 mm (1.96 in. × 1.30 in. × 0.57 in.), H × W × D

Weight
30 g (1.1 oz.)

Storage Temperature Range
-20°F to 165°F (-29°C to 74°C)

Operating Temperature Range
0°F to 135°F (-18°C to 57°C)

Receiver Output Connectors

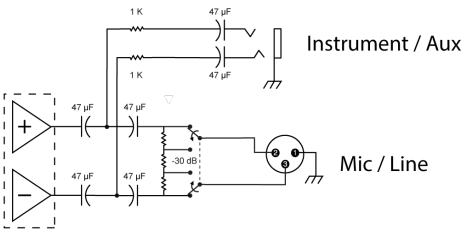

SLXD4

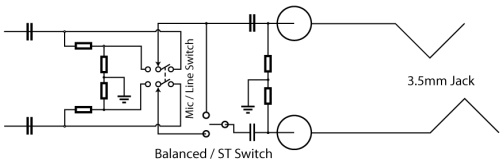

SLXD5

Transmitter Input

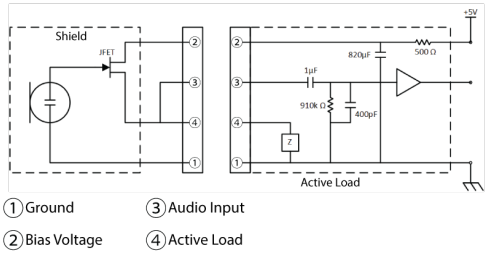

SLXD1/SLXD2

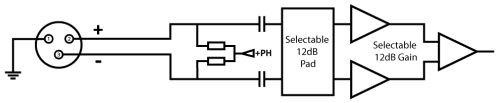

SLXD3

Frequency Range and Transmitter Output Power

Band	Frequency Range (MHz)	Power (mW RMS)* (Low/High)
G58	470 to 514	1 / 10 / 30**
G59	470 to 514	1 / 10 / 30**
G60	470 to 510	1 / 10 / 30**
G61	479 to 523	1 / 10
G62	510 to 530	1 / 10 / 30**

Band	Frequency Range (MHz)	Power (mW RMS)* (Low/High)
H55	514 to 558	1 / 10 / 30**
H56	518 to 562	1 / 10 / 30**
H57	520 to 564	1 / 10
J52	558 to 602 614 to 616	1 / 10 / 30** 1 / 10
J53	562 to 606	1 / 10 / 30**
J54	562 to 606	1 / 10 / 30**
JB	806 to 810	1 / 10
K59	606 to 650	1 / 10 / 30**
L55	646 to 690	1 / 10
L56	650 to 694	1 / 10 / 30**
L57	650 to 694	1 / 10
L58	630 to 674	1 / 10 / 30**
L59	654 to 698	1 / 10 / 30**
M55	694 to 703, 748 to 758	1 / 10 / 30**
S50	823 to 865	1 / 10
X51	925 to 937.5	1 / 10

* Power delivered to the antenna port

** SLXD3 only

Note: Frequency bands might not be available for sale or authorized for use in all countries or regions.

Frequencies for European Countries

	Country Code	Frequency Range
SLXD-G59	A, B, BG, CH, CY, CZ, D, EST, F, GB, GR, H, I, IS, L, LT, NL, P, PL, S, SK, SLO, DK, FIN, M, N, HR, E, IRL, LV, RO, TR	470 - 514 MHz*

	Country Code	Frequency Range
SLXD-G60	A, B, BG, CH, CY, CZ, D, EST, F, GB, GR, H, I, IS, L, LT, NL, P, PL, S, SK, SLO, DK, FIN, M, N, HR, E, IRL, LV, RO, TR	470 - 510 MHz*
SLXD-H56	A, B, BG, CH, CY, CZ, D, EST, F, GB, GR, H, I, IS, L, LT, NL, P, PL, S, SK, SLO, DK, FIN, M, N, HR, E, IRL, LV, RO, TR	518 - 562 MHz*
SLXD-J53	A, B, BG, CH, CY, CZ, D, EST, F, GB, GR, H, I, IS, L, LT, NL, P, PL, S, SK, SLO, DK, FIN, M, N, HR, E, IRL, LV, RO, TR	562–606 MHz*
SLXD-K59	A, B, BG, CH, CY, CZ, D, EST, F, GB, GR, H, I, IS, L, LT, NL, P, PL, S, SK, SLO, DK, FIN, M, N, HR, E, IRL, LV, RO, TR	606–650 MHz*
SLXD-L56	A, B, BG, CH, CY, CZ, D, EST, F, GB, GR, H, I, IS, L, LT, NL, P, PL, S, SK, SLO, DK, FIN, M, N, HR, E, IRL, LV, RO, TR	650 - 694 MHz*
SLXD-S50	A, B, BG, CH, CY, CZ, D, EST, F, GB, GR, H, I, IS, L, LT, NL, P, PL, S, SK, SLO, DK, FIN, M, N, HR, E, IRL, LV, RO, TR	823–865 MHz *

* This equipment may be capable of operating on some frequencies not authorized in your region. See Licensing Information.

Important Safety Information

Explanation of Symbols

⚠	This symbol indicates that dangerous voltage constituting a risk of electric shock is present within this unit.
⚠	This symbol indicates that there are important operating and maintenance instructions in the literature accompanying this unit.

Important Safety Instructions

1. READ these instructions.
2. KEEP these instructions.
3. HEED all warnings.
4. FOLLOW all instructions.
5. DO NOT use this apparatus near water.
6. CLEAN ONLY with dry cloth.
7. DO NOT block any ventilation openings. Allow sufficient distances for adequate ventilation and install in accordance with the manufacturer's instructions.
8. DO NOT install near any heat sources such as open flames, radiators, heat registers, stoves, or other apparatus (including amplifiers) that produce heat. Do not place any open flame sources on the product.

9. DO NOT defeat the safety purpose of the polarized or grounding type plug. A polarized plug has two blades with one wider than the other. A grounding type plug has two blades and a third grounding prong. The wider blade or the third prong are provided for your safety. If the provided plug does not fit into your outlet, consult an electrician for replacement of the obsolete outlet.
10. PROTECT the power cord from being walked on or pinched, particularly at plugs, convenience receptacles, and the point where they exit from the apparatus.
11. ONLY USE attachments/accessories specified by the manufacturer.
12. USE only with a cart, stand, tripod, bracket, or table specified by the manufacturer, or sold with the apparatus. When a cart is used, use caution when moving the cart/apparatus combination to avoid injury from tip-over.

13. UNPLUG this apparatus during lightning storms or when unused for long periods of time.
14. REFER all servicing to qualified service personnel. Servicing is required when the apparatus has been damaged in any way, such as power supply cord or plug is damaged, liquid has been spilled or objects have fallen into the apparatus, the apparatus has been exposed to rain or moisture, does not operate normally, or has been dropped.
15. DO NOT expose the apparatus to dripping and splashing. DO NOT put objects filled with liquids, such as vases, on the apparatus.
16. The MAINS plug or an appliance coupler shall remain readily operable.
17. The airborne noise of the Apparatus does not exceed 70dB (A).
18. Apparatus with CLASS I construction shall be connected to a MAINS socket outlet with a protective earthing connection.
19. To reduce the risk of fire or electric shock, do not expose this apparatus to rain or moisture.
20. Do not attempt to modify this product. Doing so could result in personal injury and/or product failure.
21. Operate this product within its specified operating temperature range.
22. Follow local regulations and consult qualified personnel if the product installation or relocation requires construction work. Choose mounting hardware and an installation location that can support the weight of the product. Avoid locations subject to constant vibration. Use the required tools to install the product properly. Inspect the product periodically.

WARNING:

- Voltages in this equipment are hazardous to life. No user-serviceable parts inside. Refer all servicing to qualified service personnel. The safety certifications do not apply when the operating voltage is changed from the factory setting.
- If water or other foreign objects enter the inside of the device, fire or electric shock may result.

Safety Information for Batteries

1. Battery packs may explode or release toxic materials. Risk of fire or burns. Do not open, crush, modify, disassemble, heat above 140°F (60°C), or incinerate.
2. Follow instructions from manufacturer
3. Only use Shure charger to recharge Shure rechargeable batteries

   WARNING:

   Danger of explosion if battery incorrectly replaced. Replace only with same or equivalent type.

   Do not dispose of the battery along with household waste. Check with local vendor for proper disposal of used battery packs.

4. Never put batteries in mouth. If swallowed, contact your physician or local poison control center
5. Do not short circuit; may cause burns or catch fire
6. Do not charge or use battery packs other than Shure rechargeable batteries
7. Batteries (battery pack or batteries installed) shall not be exposed to excessive heat such as sunshine, fire or the like
8. Do not immerse the battery in liquid such as water, beverages, or other fluids.
9. Do not attach or insert battery with polarity reversed.
10. Keep away from small children.
11. Do not use abnormal batteries.
12. Pack the battery securely for transport.

Note: Use only with the included power supply, batteries, or a Shure-approved equivalent.

Safety and Regulatory Information for Battery Chargers

1. This equipment is intended to be used in professional audio applications.
2. Use this battery charger only with the Shure charging modules and battery packs for which it is designed. Use with other than the specified modules and battery packs may increase the risk of fire or explosion.
3. Changes or modifications not expressly approved by Shure Incorporated could void your authority to operate this equipment.

Important Product Regulatory Information

Introduction to EMC

Electromagnetic Interference (EMI) is any signal or emission, radiated in free space or conducted along power or signal leads, that endangers the functioning of radio navigation or other safety service or seriously degrades, obstructs, or repeatedly interrupts a licensed radio communications service. Radio communications services include but are not limited to AM/FM commercial broadcast, television, cellular services, radar, air-traffic control, pager, and Personal Communication Services (PCS). These licensed radio services, and unlicensed radio services, such as WLAN, ZIGBEE or Bluetooth, along with unintentional radiators such as digital devices contribute to the electromagnetic environment.

Electromagnetic Compatibility (EMC) is the ability of items of electronic equipment to function properly together in the electronic environment. While this equipment has been designed and determined to be compliant with regulatory agency limits for EMI, there is no guarantee that interference will not occur in a particular installation.

Shure products are designed, tested, and classified for their intended electromagnetic environment. These electromagnetic environment classifications generally refer to the following harmonized definitions:

- Class B products are intended for use in residential/domestic environments but may also be used in non-residential/non-domestic environments.

  Note: *The residential/domestic environment is an environment where the use of broadcast radio and television receivers may be expected within a distance of 10 m from where this product is used.*

- Class A products are intended for use in non-residential/non-domestic environments. Class A products may also be utilized in residential/domestic environments but may cause interference and require the user to take adequate corrective measures.

EMC conformance testing is based on the use of supplied and recommended cable types. The use of other cable types may degrade EMC performance.

Regulatory Information for Wireless Products Utilizing TV Frequency Bands

CE Notice

Hereby, Shure Incorporated declares that this product with CE Marking has been determined to be in compliance with European Union requirements.

The full text of the EU declaration of conformity is available at the following site: https://www.shure.com/en-EU/support/declarations-of-conformity.

UKCA Notice

Hereby, Shure Incorporated declares that this product with UKCA Marking has been determined to be in compliance with UKCA requirements.

The full text of the UK declaration of conformity is available at the following site: https://www.shure.com/en-GB/support/declarations-of-conformity.

FCC Notice

This equipment has been tested and found to comply with the limits for a Class B digital device pursuant to Part 15 of the FCC Rules. These limits are designed to provide reasonable protection against harmful interference when the equipment is operated in a residential installation. This equipment generates, uses, and can radiate radio frequency energy and, if not installed and used in accordance with the instructions, may cause harmful interference with radio communications. However, there is no guarantee that interference will not occur in a particular installation. If this equipment does cause harmful interference with radio or television reception, which can be determined by turning the equipment off and on, you are encouraged to try to correct the interference by one or more of the following measures:

- Reorient or relocate the antenna of the radio/television receiver.
- Increase the separation between this equipment and the radio/television receiver.
- Plug the equipment into a different outlet so that the equipment and the radio/television receiver are on different power mains branch circuits.
- Consult a representative of Shure or an experienced radio/television technician for additional suggestions.

This device complies with Part 15 of the FCC Rules. Operation is subject to the following two conditions:

1. This device may not cause harmful interference.
2. This device must accept any interference received, including interference that may cause undesired operation.

Notice: The FCC regulations provide that changes or modifications not expressly approved by Shure Incorporated could void your authority to operate this equipment.

For information regarding responsible party and other matters relating to FCC compliance, please contact Shure Incorporated, 5800 W. Touhy Avenue, Niles, Illinois 60714-4608 U.S.A. shure.com/contact

This equipment complies with FCC radiation exposure limits set forth for an uncontrolled environment. End user must follow the specific operating instructions for satisfying RF exposure compliance. This transmitter must not be co-located or operating in conjunction with any other antenna or transmitter.

The portable device is designed to meet the requirements for exposure to radio waves established by the Federal Communications Commission (USA). These requirements set a SAR limit of 1.6 W/kg averaged over one gram of tissue. The highest SAR value reported under this standard during product certification for use when properly worn on the body/head. This equipment should be installed and operated with minimum distance 0 cm between the radiator and your body/head.

Industry Canada (IC) Notices

This device contains licence-exempt transmitter(s)/receiver(s) that comply with Innovation, Science and Economic Development Canada's licence-exempt RSS(s). Operation is subject to the following two conditions:

1. This device may not cause interference.
2. This device must accept any interference, including interference that may cause undesired operation of the device.

L'émetteur/récepteur exempt de licence contenu dans le présent appareil est conforme aux CNR d'Innovation, Sciences et Développement économique Canada applicables aux appareils radio exempts de licence. L'exploitation est autorisée aux deux conditions suivantes :

1. L'appareil ne doit pas produire de brouillage;
2. L'appareil doit accepter tout brouillage radioélectrique subi, même si le brouillage est susceptible d'en compromettre le fonctionnement.

This Class B digital apparatus complies with Canadian ICES-003. Cet appareil numérique de la classe B est conforme à la norme NMB-003 du Canada.

Canada Warning for Wireless

This device operates on a no-protection, no-interference basis. Should the user seek to obtain protection from other radio services operating in the same TV bands, a radio licence is required. For further details, consult Innovation, Science and Economic Development Canada's document Client Procedures Circular CPC-2-1-28, Voluntary Licensing of Licence-Exempt Low-Power Radio Apparatus in the TV Bands.

Ce dispositif fonctionne selon un régime de non_brouillage et de non_protection. Si l'utilisateur devait chercher à obtenir une certaine protection contre d'autres services radio fonctionnant dans les mêmes bandes de télévision, une licence radio serait requise. Pour en savoir plus, veuillez consulter la Circulaire des procédures concernant les clients CPC_2_1_28, Délivrance de licences sur une base volontaire pour les appareils radio de faible puissance exempts de licence et exploités dans les bandes de télévision d'Innovation, Sciences et Développement économique Canada.

This equipment complies with ISED radiation exposure limits set forth for an uncontrolled environment. This equipment could be installed and operated with minimum distance 0 cm between the radiator and your body. End user must follow the specific operating instructions for satisfying RF exposure compliance. This transmitter must not be co-located or operating in conjunction with any other antenna or transmitter.

The portable device is designed to meet the requirements for exposure to radio waves established by the ISED. These requirements set a SAR limit of 1.6 W/kg averaged over one gram of tissue. The highest SAR value reported under this standard during product certification for use when properly worn on the body/head.

Cet équipement est conforme aux limites d'exposition aux rayonnements ISED établies pour un environnement non contrôlé. Cet équipement peut-être installé et utilisé avec une distance minimale de 0 cm entre le radiateur et votre corps. L'utilisateur final doit suivre les instructions spécifiques pour satisfaire les normes. Cet émetteur ne doit pas être co-implanté ou fonctionner en conjonction avec toute autre antenne ou transmetteur.

Le dispositif portatif est conçu pour répondre aux exigences d'exposition aux ondes radio établie par le développement énergétique DURABLE. Ces exigences un SAR limite de 1,6 W/kg enmoyenne pour un gramme de tissu. La valeur SAR la plus élevée signalée envertu de cette norme lors de la certification de produit à utiliser lorsqu'il est correctement porté sur les corps/tête.

Additional Canadian information on RF exposure also can be found at the following Web address: http://www.ic.gc.ca/eic/site/smt-gst.nsf/eng/sf08792.html

ACMA Notice

WARNING: This device operates under an ACMA class license and must comply with all conditions of that license including operating frequencies.

ANATEL Notice

Este equipamento não tem direito à proteção contra interferência prejudicial e não pode causar interferência em sistemas devidamente autorizados. Para maiores informações, consulte o site da ANATEL – http://www.anatel.gov.br.

KCC Notice

해당 무선설비는 전파혼신 가능성이 있으므로 인명안전과 관련된 서비스는 할 수 없음

NBTC Notice

เครื่องโทรคมนาคมและอุปกรณ์นี้มีความสอดคล้องตามมาตรฐานหรือข้อกำหนดทางเทคนิคของ กสทช.

NCC Notice

低功率射頻器材技術規範

取得審驗證明之低功率射頻器材，非經核准，公司、商號或使用者均不得擅自變更頻率、加大功率或變更原設計之特性及功能。低功率射頻器材之使用不得影響飛航安全及干擾合法通信；經發現有干擾現象時，應立即停用，並改善至無干擾時方得繼續使用。前述合法通信，指依電信管理法規定作業之無線電通信。低功率射頻器材須忍受合法通信或工業、科學及醫療用電波輻射性電機設備之干擾。

614MHz-703MHz: 使用頻段供其他通訊業務使用時，器材應即停止使用

SRRC Notice

（一）本产品符合“微功率短距离无线电发射设备目录和技术要求”的具体条款和使用场景；

（二）不得擅自改变使用场景或使用条件、扩大发射频率范围、加大发射功率（包括额外加装射频功率放大器），不得擅自更改发射天线；

（三）不得对其他合法的无线电台（站）产生有害干扰，也不得提出免受有害干扰保护；

（四）应当承受辐射射频能量的工业、科学及医疗（ISM）应用设备的干扰或其他合法的无线电台（站）干扰；

（五）如对其他合法的无线电台（站）产生有害干扰时，应立即停止使用，并采取措施消除干扰后方可继续使用；

（六）在航空器内和依据法律法规、国家有关规定、标准划设的射电天文台、气象雷达站、卫星地球站（含测控、测距、接收、导航站）等军民用无线电台（站）、机场等的电磁环境保护区域内使用微功率设备，应当遵守电磁环境保护及相关行业主管部门的规定。

Environmental Regulatory Information

Waste Electrical and Electronic Equipment (WEEE) Directive

In the European Union and the United Kingdom, this label indicates that this product should not be disposed of with household waste. It should be deposited at an appropriate facility to enable recovery and recycling.

Registration, Evaluation, Authorization of Chemicals (REACH) Directive

REACH (Registration, Evaluation, Authorization of Chemicals) is the European Union (EU) and the United Kingdom (UK) chemical substances regulatory framework. Information on substances of very high concern contained in Shure products in a concentration above 0.1% weight over weight (w/w) is available upon request.

Recycling Information

Please consider the environment, electric products and packaging are part of regional recycling schemes and do not belong to regular household waste.

Battery Regulatory Information

EU and UK Battery Directive

In the European Union and the United Kingdom, this label indicates that the batteries in this product should be collected separately and not be disposed of with household waste. Substances in batteries can have a potential negative impact on health and environment and you have a role in recycling waste batteries thus contributing to the protection, preservation, and improvement of the quality of the environment. You should contact your local authority or retailer for details of the collection and recycling schemes available.

Certifications

FCC ID: DD4SLXD1G58, DD4SLXD1H55, DD4SLXD1J52, DD4SLXD2G58, DD4SLXD2H55, DD4SLXD2J52, DD4SLXD3G58, DD4SLXD3H55, DD4SLXD3J52. **IC:** 616ASLXD1G58, 616A-SLXD1H55, 616A-SLXD1J52, 616A-SLXD2G58, 616A-SLXD2H55, 616A-SLXD2J52, 616A-SLXD3G58, 616A-SLXD3H55, 616A-SLXD3J52.

Energy Efficiency

External Power Supply meets:

1. The U.S. Energy Conservation Standards specified in the Code of Federal Regulations at 10 CFR 430 32(w).
2. EU COMMISSION REGULATION (EU) 2019/1782 of 1 October 2019: Ecodesign requirements for External Power Supply.
3. Australian Standard requirements of AS/NZS 4665.1:2005 and AS/NZS 4665.2:2005.

Battery Charger System meets:

1. The U.S. Energy Conservation Standards specified in the Code of Federal Regulations at 10 CFR 430 32(z)
2. Canada NRCan standard: CAN/CSA-C381.2

Certification and Compliance Markings