Smart Series PTZ Pendant Extension 500mm

TP-PCPDM5

SPECIFICATIONS

Part Number	**TP-PCPDM5**
Compatibility	To be use with TP-PCPDMB and cameras with 1.5” NPT. Please always refer to camera datasheet for accuracy.
Dimensions	Ø 59mmx526mm(Φ2.3”x20.7”)
Weight	0.93kg(2.1lb)
Material	Aluminum alloy

DIMENSIONS

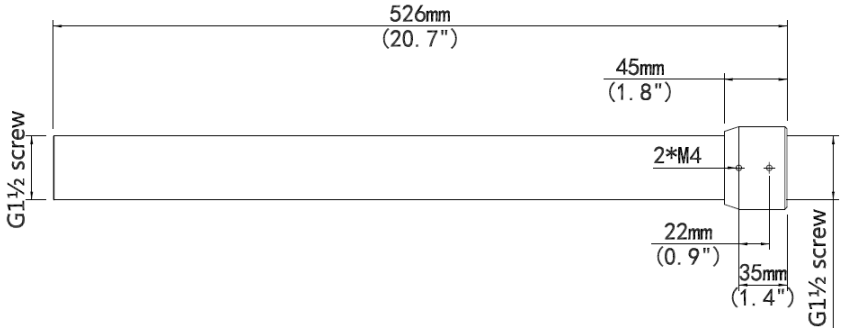

Turing.ai